01V

12/06

3-Way Temperature Control Valve

G Valve

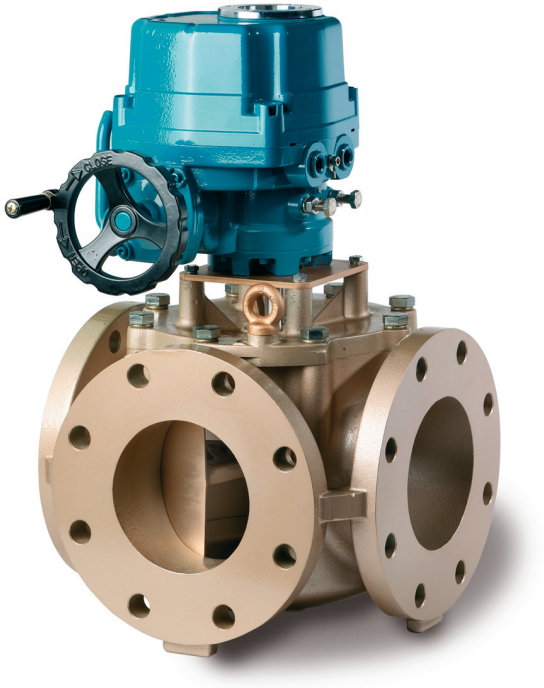

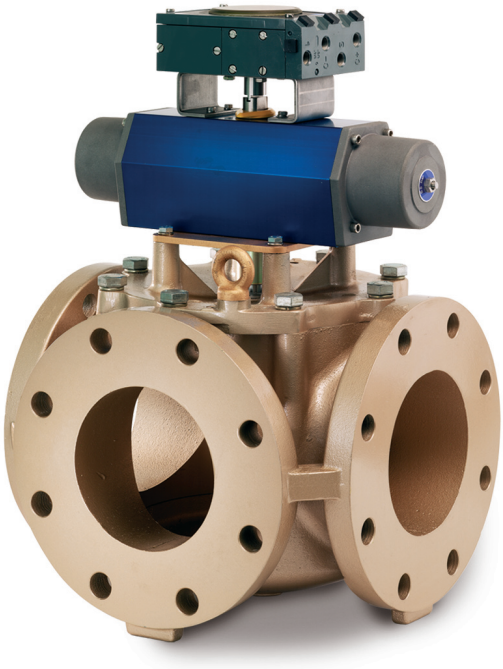

Typical applications

- Lubricating oil temperature control
- Jacket water cooling
- Charge air temperature control
- Central cooling
- Sea water cooling

Key benefits

- Compact size - reduced system design cost
- Flexible design - ports can be configured to suit installation
- Low pressure drop - smaller valve size can be used compared to other designs
- Hand wheel allows manual adjustment of valve - simplified set up and maintenance

☎ +44 (0)1284 762222

G Valve systems

The system is available in 3 standard control configurations, offering flexibility for most requirements.

Electric system

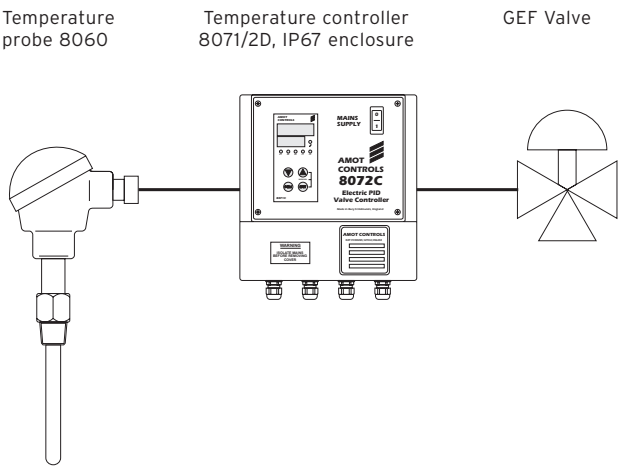

The electric valve system incorporates the use of an electrically actuated three-way control valve with an electronic controller.

The controller can be either panel or wall mounted.

The system is completed with a temperature sensor. The electric G Valve system is simple to install with standard four core cable, and provides more accurate measurement and control than typical pneumatically operated systems.

Electric actuator

The electric actuator is a rugged, compact and lightweight, quarter turn actuator having enclosure protection to IP65.

The actuator is powered by an electric motor driving a worm-type gearbox. The worm gearbox prevents reverse drive due to fluid forces. It is fitted with manual override as standard, enabling valve operation without power.

A thermal cutout is fitted preventing overheating. Limit switches at each end of stroke disconnect motor power when end stroke is reached. These can also be used for remote indication.

See datasheet 01VA Electric Actuator for more information.

Pneumatic system

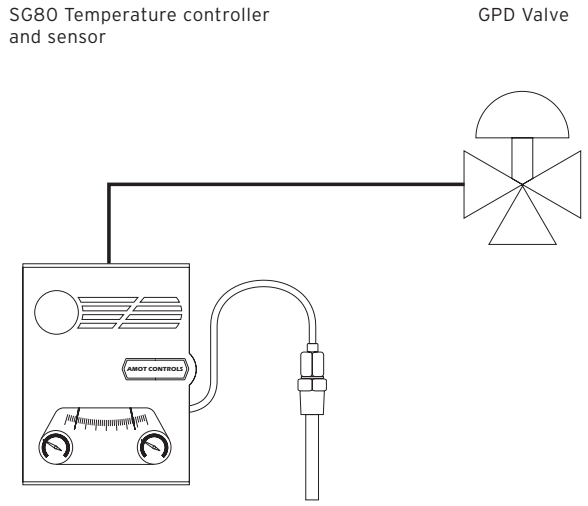

The pneumatic valve system incorporates a pneumatically actuated three-way control valve with controller and integral temperature sensor which can be panel or wall mounted.

The pneumatic G Valve system is ideal when there is a lack of electricity, when a fail-safe system is needed, or in a hazardous area installation.

Pneumatic actuator

The pneumatic actuator is a rugged, quarter turn, double piston actuator operating on a scotch yoke principle.

The actuator is fitted with spring return as standard allowing failsafe configuration if necessary.

It is also fitted with a valve positioner enabling accurate and repeatable movement.

Electro-pneumatic system

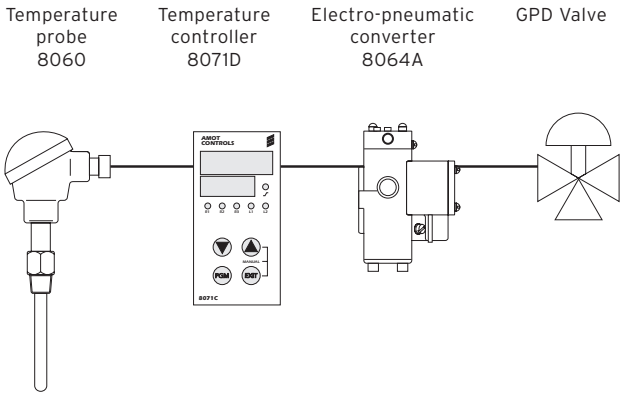

The electro-pneumatic valve system combines both electric and pneumatic technology, consisting of a pneumatically actuated three-way control valve with an electro-pneumatic converter.

The probe sends a resistance signal to the electronic controller, which in turn sends a 4 to 20mA signal to an I/P converter that converts this to a pneumatic signal.

The electro-pneumatic system combines the features and functionality of the AMOT electronic control system with the failsafe action and hazardous area mounting benefits of a pneumatically actuated valve.

Applications

Lubricating oil temperature control

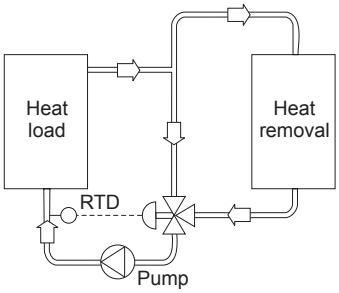

Lubricating oil temperature control is normally configured in a mixing application controlling the return temperature to the heat load. The temperature is normally measured as close as possible to the sump return.

Jacket water cooling

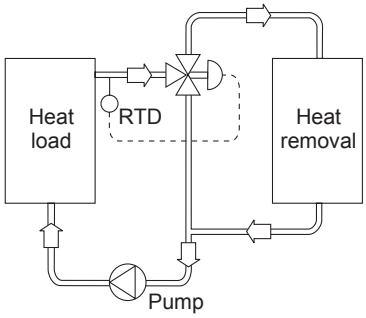

Jacket water cooling in diverting applications regulates the outlet coolant water temperature from a diesel or gas engine. The valve either sends water to a cooler or bypass loop, accurately maintaining the temperature.

The temperature is normally measured at the outlet from the heat source.

Charge air temperature control

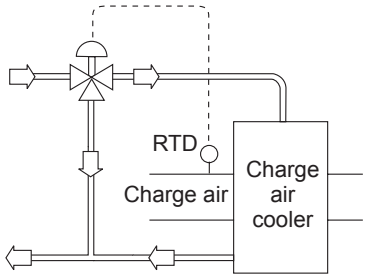

The intercooler is used to cool high temperature turbo charger air.

In this application the G Valve regulates the flow of cooling water through an intercooler, increasing efficiency, enhancing performance and helping to meet today's environmental requirements.

Central cooling

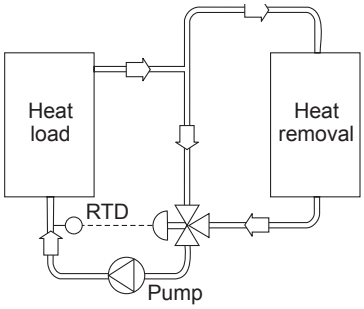

For large flow central cooling, mixing or diverting applications where accurate temperature control is required, the G Valve provides the solution.

Sea water cooling

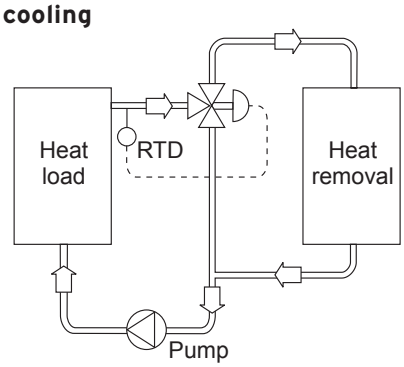

On sea water cooling applications, bronze G Valves are recommended. These can be used for mixing and diverting applications.

Specification

Flow to:	3000m³/hr (13,200 us gpm)	
Sizes:	50mm (2") to 400mm (16")	
Body materials:	Cast iron (BS: 1452 250)	For fresh water, lubricating oils
	Bronze (BS: 1400 LG2)	For seawater, shock resistance, or magnetic permeability
	Steel (BS: 3100 A1)	For high strength and high pressure ratings
	Ductile iron (BS: 2789 SNG 420/12)	High performance iron
	Stainless steel (BS: 3100 316C16F)	Corrosive and special applications
Rotor material:	Bronze or stainless steel	
Rotor shaft:	Stainless steel	
Shaft seal material:	Viton rubber (GEF)	Nitrile or Viton (GPD)
Flanges:	Most DIN, ANSI and JIS standards	
Maximum internal valve pressure:	Cast iron, ductile iron or bronze	10 bar (145 psi)
	Steel and stainless steel	16 bar (232 psi)
Maximum temperature of fluid:	100ºC (212ºF)	Refer to AMOT for higher temperature requirements

G Valve selection curves: common fluids

Valve selection curves for valves with 90° rotor. For valves with 180° rotor multiply pressure drops by 2.

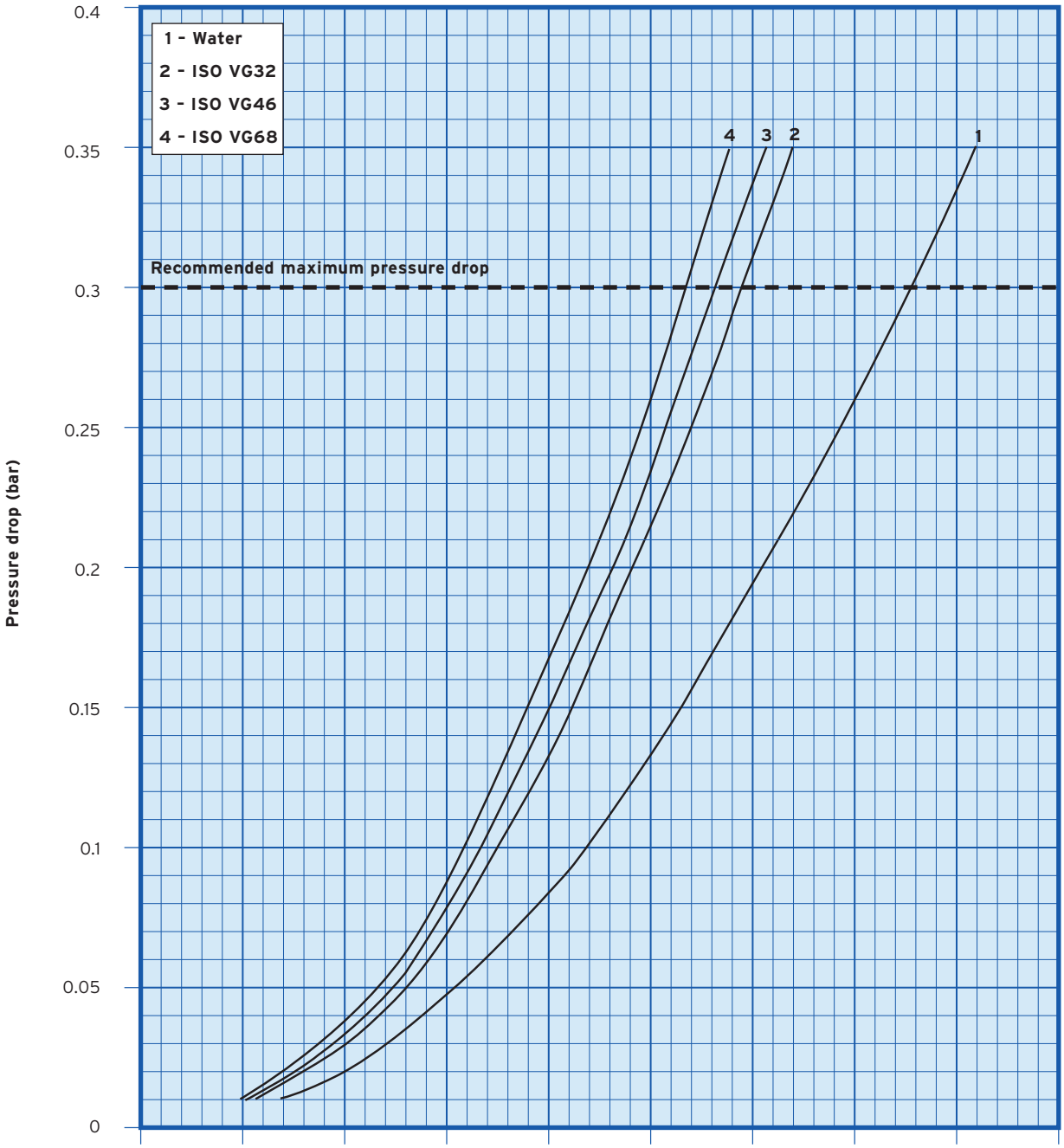

Size	♦	♦	♦	♦	♦	♦	♦	♦
2G	7	14	20	26	33	39	46	52
3G	19	35	51	67	83	99	115	131
4G	29	54	79	104	129	154	179	204
6G	66	122	178	235	291	347	403	459
8G	118	218	318	418	517	617	717	817
10G	184	340	496	652	808	964	1120	1276
12G	266	491	715	940	1164	1389	1613	1838
14G	361	667	973	1279	1585	1890	2196	2502
16G	472	871	1270	1670	2069	2468	2868	3267

Flowrate m3/hr

G Valve bypass flowrates

AMOT G Valves allow a certain amount of leakage past their metal seat. The amount of leakage will vary due to the amount of pressure on the valve, typical leakage amounts are shown below.

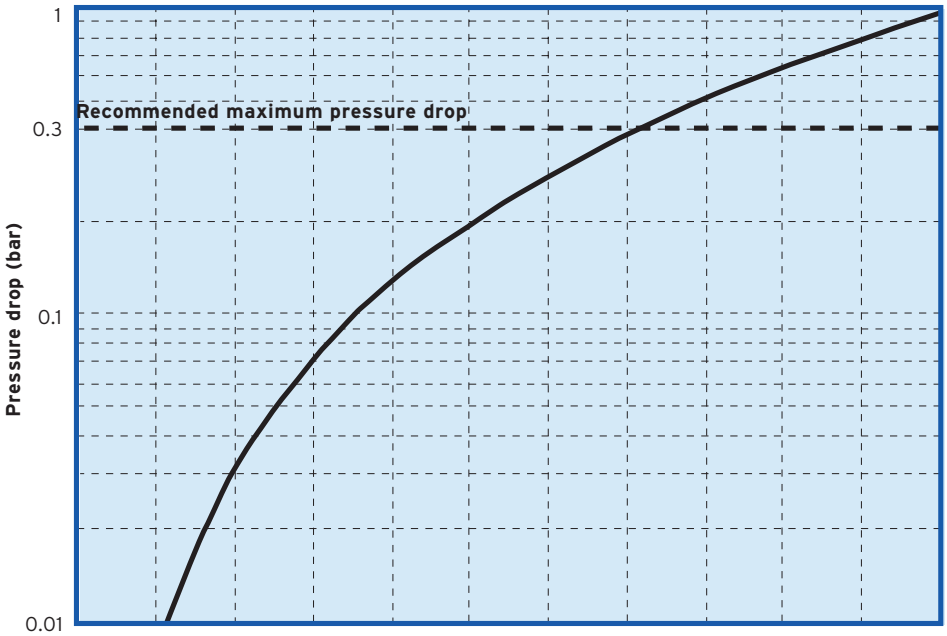

Size	♦	♦	♦	♦	♦	♦	♦	♦	♦	♦	♦
2G	0.05	0.07	0.09	0.1	0.11	0.12	0.13	0.14	0.15	0.16	0.23
3G	0.08	0.12	0.14	0.16	0.18	0.2	0.22	0.23	0.25	0.26	0.37
4G	0.17	0.25	0.3	0.35	0.39	0.43	0.4	0.49	0.52	0.55	0.78
6G	0.31	0.44	0.54	0.63	0.7	0.77	0.83	0.89	0.94	0.99	1.4
8G	0.45	0.64	0.79	0.91	1.01	1.11	1.2	1.28	1.36	1.43	2.03
10G	0.58	0.82	1.01	1.16	1.3	1.42	1.54	1.64	1.74	1.84	2.6
12G	0.83	1.18	1.44	1.67	1.86	2.04	2.21	2.36	2.5	2.64	3.73
14G	1.03	1.46	1.79	2.06	2.31	2.53	2.73	2.92	3.09	3.26	4.61
16G	1.32	1.87	2.28	2.64	2.95	3.23	3.49	3.73	3.96	4.17	5.9

Leakage m^3/hr

Size	Kv	Cv
2G	82	96
3G	207	242
4G	323	378
6G	729	851
8G	1296	1513
10G	2025	2364
12G	2918	3405
14G	3972	4635
16G	5187	6053

Cvs applicable to 90° rotor versions only. For 180° versions

$$Kv_{180} = \frac{Kv_{90}}{2}$$

Vibration

Exceeds the requirements of Lloyd's Register Type Approval System, Test Specification Number 1, 2002, Vibration Test 2.

For both electric and pneumatic:

Frequency range	Displacement	Acceleration	Lloyd's
5 - 25 Hz	+/- 1.6mm		+/- 1.6mm
25 - 100 Hz		+/-5.0g (49 m/s²)	+/- 4.0g (39 m/s²)
100 - 300 Hz		+/- 1.0G (9.81 m/s²) 90 minute	No requirement

Weight

Approximate weight of pneumatic valve Kg (lbs)

Material	2GPD	3GPD	4GPD	6GPD	8GPD	10GPD	12GPD	14GPD	16GPD
Cast Iron	19 (43)	29 (65)	52 (114)	82 (184)	142 (319)	183 (411)	289 (649)	429 (964)	583 (1310)
Bronze	21 (47)	32 (72)	41 (92)	96 (216)	160 (360)	205 (460)	313 (703)	479 (1076)	679 (1525)

Approximate weight of electric valve Kg (lbs)

Material	2GEF	3GEF	4GEF	6GEF	8GEF	10GEF	12GEF	14GEF	16GEF
Cast Iron	22 (49)	32 (72)	55 (121)	86 (193)	146 (328)	187 (420)	295 (663)	435 (977)	575 (1292)
Bronze	24 (54)	35 (79)	70 (154)	100 (225)	164 (368)	209 (470)	319 (717)	485 (1089)	671 (1507)

Valve dimensions

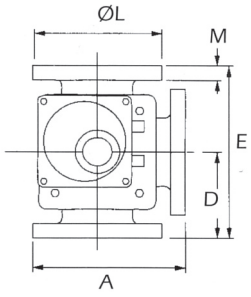

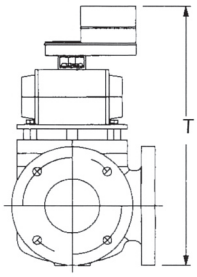

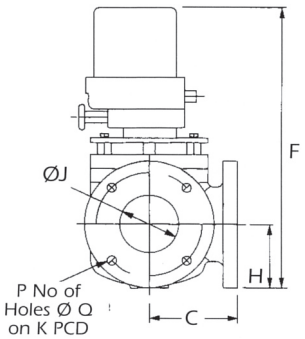

Valve size nominal bore MM (inches)

Dimension/Connection		2G	3G	4G	6G	8G	10G	12G	14G	16G
A		197.5 (7.776)	240 (9.449)	260 (10.236)	327 (12.874)	395 (15.551)	469 (18.465)	574 (22.598)	624 (24.567)	706 (27.795)
C		115 (4.528)	140 (5.512)	150 (5.906)	185 (7.284)	225 (8.858)	260 (10.236)	300 (11.811)	340 (13.386)	385 (15.158)
D		115 (4.528)	140 (5.512)	150 (5.906)	185 (7.284)	225 (8.858)	260 (10.236)	300 (11.811)	340 (13.386)	385 (15.158)
E		230 (9.055)	280 (11.024)	300 (11.811)	370 (14.567)	450 (17.717)	520 (20.472)	600 (23.622)	680 (26.772)	770 (30.315)
F		386 (15.2)	421 (16.57)	477 (18.78)	567 (22.32)	676 (26.61)	783 (30.82)	902 (35.51)	1017 (40.04)	1093 (43.03)
H		82.5 (3.248)	100 (3.937)	126 (4.961)	142 (5.590)	170 (6.692)	252 (9.921)	297 (11.693)	339 (13.347)	378 (14.882)
ØJ		50 (1.969)	80 (3.150)	100 (3.937)	150 (5.906)	200 (7.874)	250 (9.843)	300 (11.811)	350 (13.780)	400 (15.748)
K	PN 6	110 (4.3)	150 (5.9)	170 (6.7)	225 (8.8)	280 (11)	335 (13)	395 (15.5)	445 (17.5)	495 (19.4)
	PN 10	125 (4.912)	160 (6.299)	180 (7.087)	240 (9.449)	295 (11.614)	350 (13.714)	400 (15.748)	460 (18.110)	515 (20.276)
	PN 16	125 (4.921)	160 (6.299)	180 (7.087)	240 (9.449)	295 (11.614)	355 (13.967)	410 (16.142)	470 (18.504)	525 (20.670)
	ASA 125 lb	120.6 (4.748)	152.4 (6.000)	190.5 (7.500)	241.3 (9.500)	298.5 (11.750)	361.95 (14.250)	431.8 (17.00)	467.3 (18.750)	539.75 (21.250)
	JIS 5K	–	–	165 (6.5)	230 (9)	280 (11)	–	390 (15.3)	–	–
	JIS 10K	–	–	175 (6.9)	240 (9.4)	290 (11.4)	–	–	–	–
ØL		165 (6.496)	200 (7.878)	220 (8.661)	285 (11.220)	340 (13.386)	405 (15.945)	460 (18.110)	520 (20.472)	580 (22.835)
M		20 (0.787)	22 (0.866)	24 (0.945)	27 (1.062)	28 (1.102)	28 (1.102)	28 (1.102)	30 (1.181)	32 (1.260)
P	PN 6	4	4	4	8	8	12	12	12	16
	PN 10	4	8	8	8	8	12	12	16	16
	PN 16	4	8	8	8	12	12	12	16	16
	ASA 125 lb	4	4	8	8	8	12	12	12	16
	JIS 5K	–	–	8	8	8	–	12	–	–
	JIS 10K	–	–	8	8	8	–	–	–	–
Q	PN 6	14 (0.5)	19 (0.7)	19 (0.7)	19 (0.7)	19 (0.7)	18 (0.7)	22 (0.9)	22 (0.9)	22 (0.9)
	PN 10	18 (0.709)	18 (0.709)	18 (0.709)	23 (0.905)	23 (0.905)	22 (0.866)	22 (0.866)	22 (0.866)	26 (1.024)
	PN 16	18 (0.709)	18 (0.709)	18 (0.709)	23 (0.905)	23 (0.905)	26 (1.024)	26 (1.024)	26 (1.024)	30 (1.181)
	ASA 125 lb	19 (0.748)	19 (0.748)	19 (0.748)	23 (0.905)	23 (0.905)	25.4 (1.000)	25.4 (1.000)	28.6 (1.125)	28.6 (1.125)
	JIS 5K	–	–	19 (0.7)	19 (0.7)	23 (0.9)	–	23 (0.9)	–	–
	JIS 10K	–	–	19 (0.7)	23 (0.9)	23 (0.9)	–	–	–	–
T		391 (15.39)	426 (16.77)	482 (18.98)	607 (23.90)	676 (26.61)	783 (30.83)	917 (36.10)	1032 (40.63)	1138 (44.80)

Specification: modes of operation

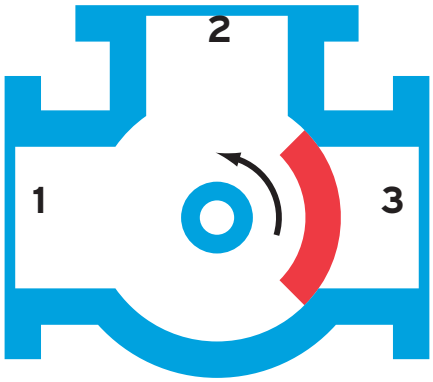

The unique construction of the AMOT G valve provides total flexibility by allowing you to select the valve port positions most ideally suited to meet your application requirements. There are two main types of mode of operation:

1. 90 degree rotor that allows either ports 1 or 3 to be selected as the common port.
2. 180 degree rotor that requires port 2 to be the common port.

Arrow indicates valve movement with increasing temperature or mA, as viewed from above (see diagram).

	Electric actuator (basic actuator codes A & B)		**Pneumatic actuator direct acting**			**Pneumatic actuator reverse acting**		
	Cold position	Hot position	3 PSI (cold)	15 PSI (hot)	No signal	15 PSI (cold)	3 PSI (hot)	No signal
Mode 32								
Mode 21								
Mode 12								
Mode 23								
Mode 13								
Mode 31								

Note: Modes 13 and 31 are not available for models 10" (DN250), 12" (DN300), 14" (DN350) & 16" (DN400)

Electric valve specification check list

Use the tables below to select the unique specification of your GEF Valve.

Please select one characteristic from each section. Each characteristic is associated with a code that you will need to state when ordering.

Valve size	Code	✔
2 inch (DN50)	2	
3 inch (DN80)	3	
4 inch (DN100)	4	
6 inch (DN150)	6	
8 inch (DN200)	8	
10 inch (DN250)	10	
12 inch (DN300)	12	
14 inch (DN350)	14	
16 inch (DN400)	16	

Type	Code	✔
Electric actuation	GEF	✔

Body and seal material	Code	✔
Cast iron and Viton	C*	
Bronze and Viton	B	
Ductile iron and Viton	D	
Steel – not 12" (DN300), 14" (DN350) and 16" (DN400) and Viton	S	
Stainless steel – not 12" (DN300), 14" (DN350), and 16" (DN400) and Viton	R	

Connections	Code	✔
Flanged PN6	A	
Flanged PN10	B	
Flanged PN16	C	
Flanged ANSI 125lb	F	
Flanged ANSI 150lb	J	
Flanged ANSI 300lb	H	
JIS 10k	L	
JIS 5k	M	

* AMOT reserves the right to subsitute a ductile iron product in place of cast iron to meet customer delivery requirements.

Basic actuator	Code	✔
200/240V ac electric – GEF only	A	
110/120V ac electric – GEF only	B	

Actuator options	Code	✔
Standard – For detailed information see separate datasheet	0	
5K OHM potentiometer	1	
Standard with positioner port	2	
4-20mA electronic positioner with position retransmit	A	
4-20mA electronic positioner with input retransmit	B	
4-20mA electronic positioner with position error output (4mA ref) (GEF)	C	
4-20mA electronic positioner with position error output (12mA ref) (GEF)	D	
As 'A' but reverse acting	E	
As 'B' but reverse acting	F	
As 'C' but reverse acting	G	
As 'D' but reverse acting	H	
Switched live control with position retransmit (4mA at ACW)	J	
As 'J' but reverse acting (4mA at CW)	K	

Mode of operation (movement with rising temperature, see page viii)	Rotor type	Code	✔
Anti clockwise port 3 to port 2	Standard 90º	32	
Anti clockwise port 2 to port 1	Standard 90º	21	
Clockwise port 1 to port 2	Standard 90º	12	
Clockwise port 2 to port 3	Standard 90º	23	
Anti clockwise port 1 to port 3	180º (2", 3", 4", 6", 8" & 10" only)	13	
Clockwise port 3 to port 1	180º (2", 3", 4", 6", 8" & 10" only)	31	

Once you have made your selection, or if you need advice, please call us on:

+44(0)1284 762222

fax +44(0)1284 760256 email info@amot.com

Pneumatic valve specification check list

Use the tables below to select the unique specification of your GPD Valve.

Please select one characteristic from each section. Each characteristic is associated with a code that you will need to state when ordering.

Valve size	Code	✔
2 inch (DN50)	2	
3 inch (DN80)	3	
4 inch (DN100)	4	
6 inch (DN150)	6	
8 inch (DN200)	8	
10 inch (DN250)	10	
12 inch (DN300)	12	
14 inch (DN350)	14	
16 inch (DN400)	16	

Type	Code	✔
Pneumatic actuation	GPD	✔

Body / seal material	Code	✔
Bronze and Nitrile	B	
Cast iron and Nitrile	C*	
Ductile iron and Nitrile	D	
Cast steel and Nitrile	S	
Stainless steel and Nitrile	R	
Bronze and Viton	E	
Cast iron and Viton	F*	
Ductile iron and Viton	G	
Cast steel and Viton	H	
Stainless steel and Viton	J	

Flange drilling	Code	✔
Flanged PN6	A	
Flanged PN10	B	
Flanged PN16	C	
Flanged ANSI 125lb	F	
Flanged ANSI 150lb	J	
Flanged ANSI 300lb	H	
JIS 10k	L	
JIS 5k	M	

* AMOT reserves the right to subsitute a ductile iron product in place of cast iron to meet customer delivery requirements.

Actuator type	Actuator port threading	Code	✔
0.21 to 1.03 Bar (3 to 15 psi) Command signal	BSP	B	
	NPT	F	
0.21 to 1.03 Bar (3 to 15 psi) Command signal with manual override	BSP	C	
	NPT	G	
Pneumatic 4 to 20mA Command signal with manual override	BSP	D	
	NPT	H	
Pneumatic 4 to 20mA Command signal	BSP	E	
	NPT	J	

Type	Code	✔
Pneumatic actuation	0	✔

Valve action with rising temperature	Required control system action	Code	✔
Anticlockwise Port 3 to Port 2 Standard 90°	Direct	E	
	Reverse	N	
Anticlockwise Port 2 to Port 1 Standard 90°	Direct	F	
	Reverse	P	
Clockwise Port 1 to Port 2 Standard 90°	Direct	G	
	Reverse	R	
Clockwise Port 2 to Port 3 Standard 90°	Direct	H	
	Reverse	S	
Anticlockwise Port 1 to Port 3 180° (2", 3", 4", 6", 8" & 10" only)	Direct	L	
	Reverse	M	
Clockwise Port 3 to Port 1 180° (2", 3", 4", 6", 8" & 10" only)	Direct	J	
	Reverse	K	

Once you have made your selection, or if you need advice, please call us on:

+44(0)1284 762222

fax +44(0)1284 760256 email info@amot.com

Europe and Africa

AMOT
Western Way
Bury St Edmunds
Suffolk, IP33 3SZ
England

Tel +44 (0) 1284 762222
Fax +44 (0) 1284 760256
Email info@amot.com

AMOT Controls GmbH
Rondenbarg 25
22525 Hamburg
Germany

Tel +49 (0) 40 8537 1298
Fax +49 (0) 40 8537 1331
Email germany@amot.com

Americas

AMOT USA
8824 Fallbrook Dr
Houston, TX 77064
USA

Tel +1 (281) 940 1800
Fax +1 (281) 668 8802
Email sales@amotusa.com

Asia and Australasia

AMOT Shanghai
Rm A8-671 Jiahua Business Center
808 Hongqiao Road
Shanghai 200030
China

Tel +86 (0) 21 6447 9708
Fax +86 (0) 21 6447 9718
Email shanghai@amot.com

AMOT Singapore
10 Eunos Road 8 #12-06
Singapore Post Centre
Singapore 408600

Tel +65 6293 4320
Fax +65 6293 3307
Email singapore@amot.com