BIOVENT® Hygienic Valve



ARCA VALVES
quality engineered control valves

BIOVENT®
Hygienic Valve

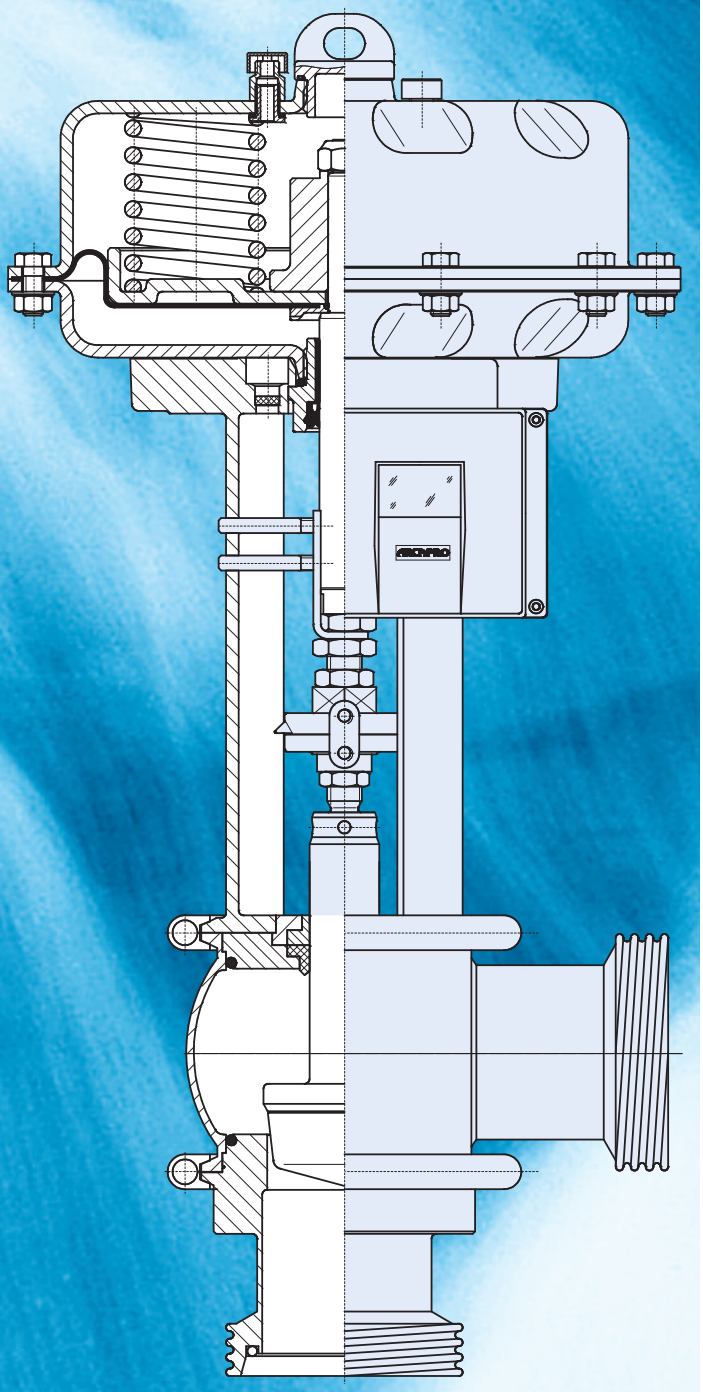

Committed to perfection in every detail

Powerful valve actuator
BIOVENT® control valves are usually combined with pneumatic multi-spring ARCAPAQ actuator type 813. Not only is it cost effective, robust, and explosion proof, but also provides short stroking times and a constant seating force. The actuator is available in different sizes optimized in line with the required actuating force. BIOVENT® control valves are also available with optional electric actuators. For more details, please see the ARCA actuators brochure.

Multi-functional positioner
Thanks to the digital ARCAPRO® positioner, BIOVENT® control valves are equipped with a multifunctional interface with the controller or process control system and operate as standard with 4–20 mA. HART, Profibus (PA), and Foundation Fieldbus, for example, are used to establish a digital interface with bidirectional data exchange (including status messages). For more details, please refer to the ARCA positioners brochure.

Flexible hygienic housing
The stainless steel spherical housing with zero dead space offers the ideal flow conditions. The internal height of the housing matches the internal diameter of the connection pipe. The hygiene-commited design of BIOVENT® control valves is CIP capable and ensures that any residue is drained. This makes the valves easy to clean and prevents damage caused by oxidation as well as media from settling. The housing components are connected by means of stainless steel clamping rings, which facilitates maintenance and allows different housing and connection types to be used.

Hygienic housing and stem seals
EPDM O-rings, which are shaped to a defined size in a form-fit installation space, are used as standard to ensure that the housing components are sealed in line with FDA requirements. The O-ring is pre-tensioned so that it is flush with the wall of the housing and secures the seals. Optimum CIP conditions are ensured. A special combination sealing element with wiper ring is used on the dynamic seal of the valve stems. Purge liquid and/or particles are removed upstream of the sealing element and bearing, thereby preventing them from settling or being crushed between the stem and bearing.

High-precision valve trims
The BIOVENT® control valves are equipped with valve trims specially designed for the prevailing flow conditions in your plant. The shapes of the closure members and valve seats as well as the material from which they are made (1.4571 superfinished, roller burnished, 1.4404) are optimized in line with your requirements. The replaceable plug and clamped valve seat allow the system to be easily adapted to different operating conditions. Various Kvs values can be selected for each nominal diameter, which means that the valve can be optimized to meet the actual service conditions.

Housing styles/connections

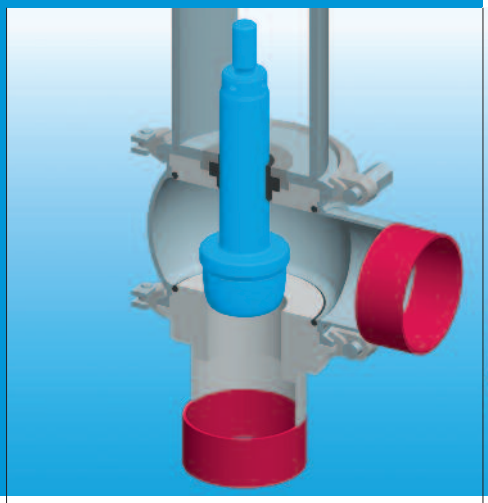

Angular valve with welding stubs (type 391-P1-L)

This design is a cost-effective standard version of the BIOVENT® hygiene valve. It comprises a spherical housing with a pipe connection and a vertical valve inlet with an integrated valve seat. The flow direction is always against the direction closing of the plug.

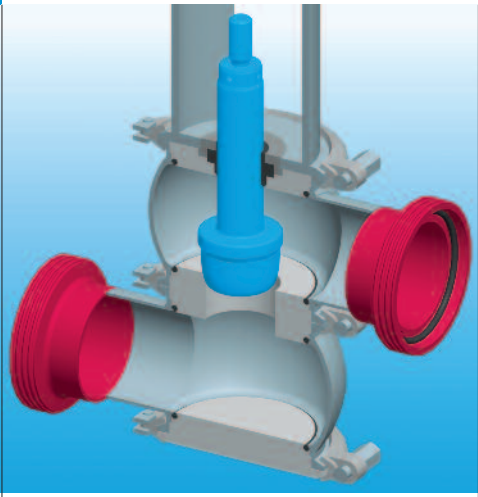

Straight-way valve with knuckle thread (type 391-P1-BO)

This design comprises two spherical housings, each with one connection. The valve seat is secured as a separate component between the two halves of the housing, which means that it can be quickly and easily replaced. The clamping ring connections allow the two pipe connections to be aligned as required. The knuckle threads are manufactured in accordance with DIN 11851.

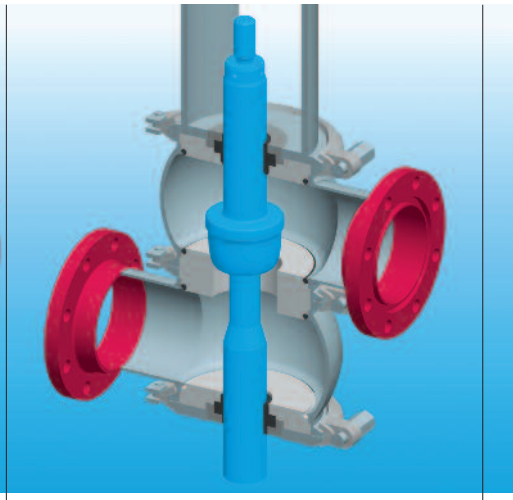

Straight-way valve with flanged connection (type 391-P1-BM)

This design also comprises two spherical housings, each with one connection and with a clamped and easily exchangeable seat ring. With larger nominal diameters or Kvs values, a second, lower guide for the plug is recommended to prevent vibrations of the stem.

Valve trims

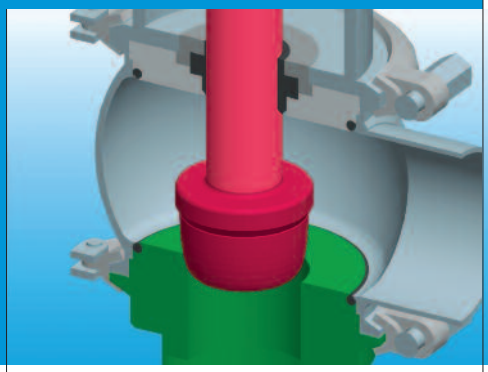

Standard parabolic plug with metal seal

The single-step parabolic plug is the ideal solution for laminar or turbulent flows. This version is suitable for handling high viscosity fluids or media containing fruit. The linear or equal-percentage plug is located in the spherical housing, which is designed in such a way that it can be cleaned thoroughly. The valve has a metal sealing and a one-piece plug.

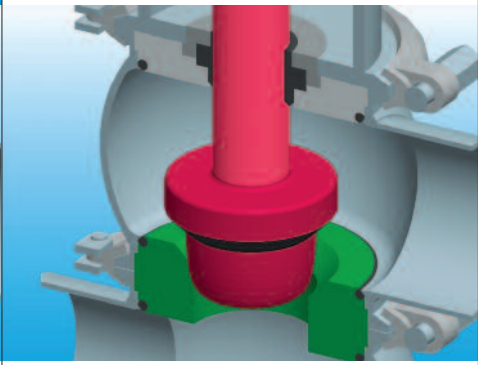

Parabolic plug with V-ring soft seal

If the hygienic valve is also used as a shut-off device, maximum tightness can be ensured by means of an EPDM or FPM V-ring soft seal. The seating thrusts are absorbed by the metal support. The stress-relieved installation of the seal increases the service life. The secure fixing of the soft seal allows the system to be used in vacuums or in applications with high flow velocity.

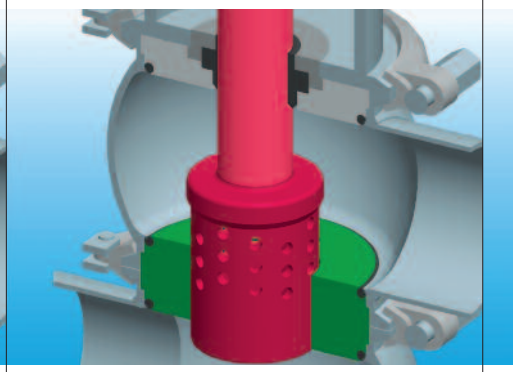

Perforated plug

A special perforated plug can be used in applications with critical pressures. The bores in the perforated plug divide the flow into numerous small flows which are less critical concerning cavitation and erosion. This not only protects the trim and housing but also reduces the noise level.

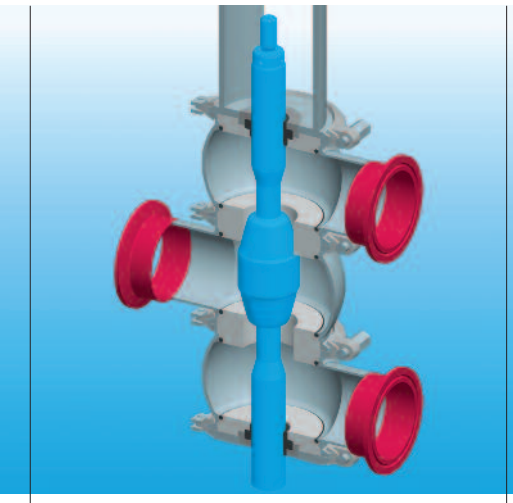

Three-way valve as a flow mixer (type 391-M-WM)

This valve design comprises three identical spherical housings, each with a pipe connection. Both valve seats are secured between the housing components. This valve can be used as a flow mixer or flow divider. In the picture a valve with Tri-Clamp® connections is shown.

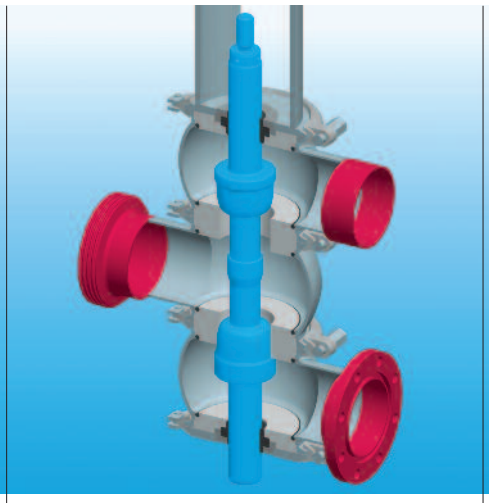

Three-way valve as a flow divider (type 391-T-WM)

This three-way valve is dimensioned for both plugs with the maximum Kvs value and a linear characteristic. Reduced Kvs values are also available as an option. This valve is ideal as a flow divider.

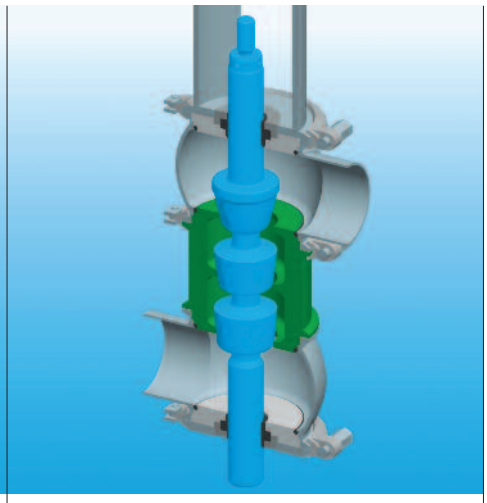

Multi-step valve (type 391-P3-BM)

This multi-step valve combines two spherical housings (each with one connection) and a specially-shaped valve seat, which is secured between the two housing components by means of clamping rings. The control unit is ideal for pressure reducing of liquids at high differential pressure, thereby preventing the serious consequences of cavitation.

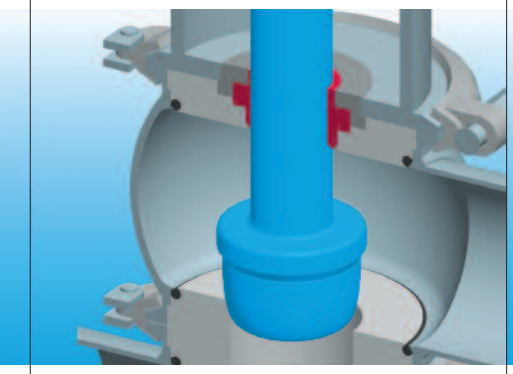

Stem seal with combination sealing element

A specially-developed combination sealing element with wiper ring seals the polished and roller burnished valve stem. The wiper ring protects the sealing element and bearing against the ingress of purge liquid and particles, thereby preventing media from settling or abrasive particles from being crushed or ground down between the stem and bearing.

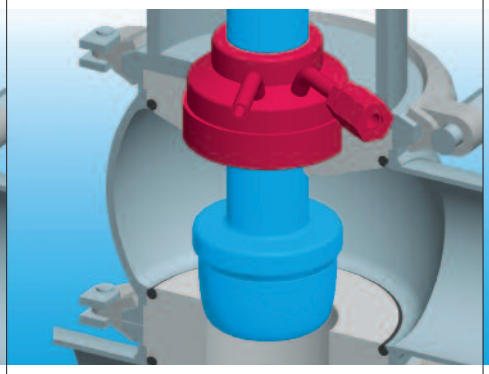

Stem seal with sterile lock

The sterile lock, which can be applied with steam or other sterilizing media, protects the product space against the environmental air. The medium is applied to the sterile lock at the discharge end in such a way that it always remains on the «sterilized» side.

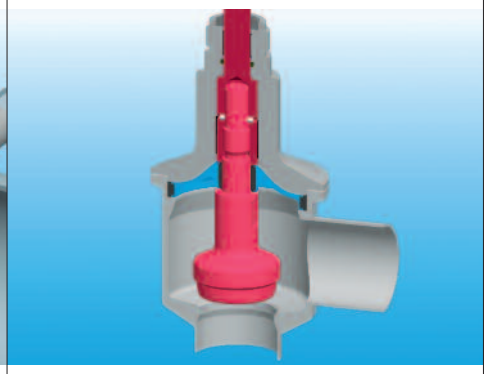

OPTISEAL® hermetic stem seal

The specially-developed OPTISEAL® diaphragm seal ensures that the stem is hermetically sealed. A twin-diaphragm seal with an additional safety stuffing box, and optional hydraulic support, and a diaphragm breakage monitor provides triple stem seal protection and offers major benefits particularly in sterile processes.

Ensuring precision and efficiency

The ARCA BIOVENT® hygiene valve features zero dead space and is designed to ensure that it can be thoroughly cleaned. The modular design of the valve housing, connections, stem seals, valve trims, actuator, and positioner enables it to be optimized in line with your requirements. The hygiene-oriented design, efficiency, control precision, price/performance ratio, and maintenance outlay of the ARCA BIOVENT® hygiene valve are carefully harmonized to minimize the total cost of ownership. Our commitment to innovation in valve technology ensures that you benefit from maximum control precision for your application. Why not see for yourself!

BIOVENT® Hygienic Valve

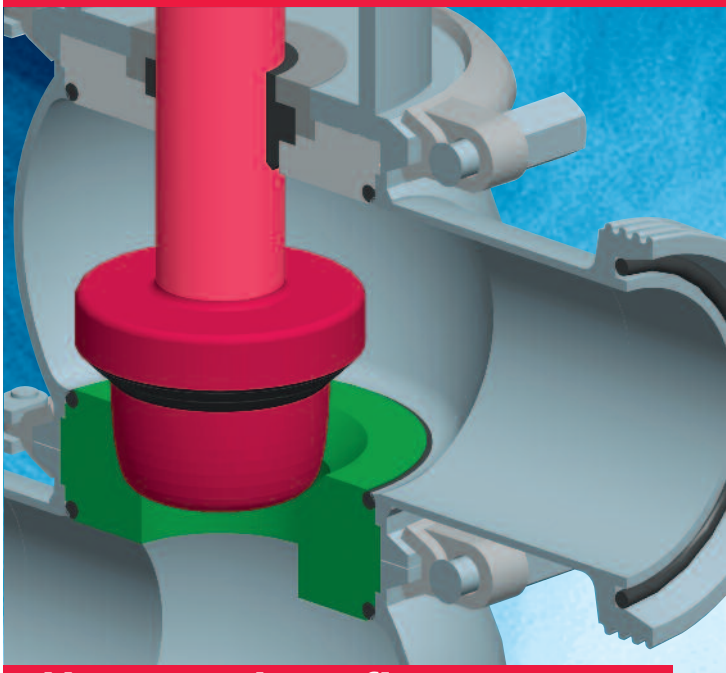

Our innovations

How you benefit

1 Flow-optimized valve housing	✔ Zero dead space ✔ GMP compatible ✔ FDA compliant ✔ 3A sanitary standard (optional) ✔ Low noise emission
2 Nominal diameter identical to internal diameter of piping	✔ Optimum CIP conditions ✔ No sources of infection
3 Compact module connection by means of clamping rings	✔ Maintenance without special tools ✔ Quick and easy disassembly
4 Valve plug and seat can be replaced separately	✔ Cost-effective plug replacement ✔ Flexible valve adjustment ✔ Minimal spare parts required
5 Stem seal with special sealing element and additional wiper ring	✔ Long-term safety ✔ Maintenance free
6 Modular system	✔ A wide range of connection and housing types ✔ Quick adjustment to process changes ✔ Highly cost effective
7 Customized sealing solutions	✔ EPDM seals from –40 °C to +135 °C (up to +150 °C over short periods) ✔ FPM seals from –10 °C to +200°C (optional)
8 Triple-sealed, hermetic stem seal OPTISEAL®	✔ Hermetic twin-diaphragm seal ✔ Additional safety stuffing box ✔ Hydraulic support for diaphragm (optional) ✔ Diaphragm breakage monitor

www.arca-valve.com

BIOVENT®
Hygienic Valve

General specifications

Series	391		
DN	15 – 150		
PN	10 – 25		
Housing types	Angular	L	Parabolic plug
	Straight way	BO	Parabolic plug
	Straight way	BM	Parabolic plug (double guided)
	3 step	BM	3-step plug (P3)
	3 way	M-WM	Flow mixer
	3 way	T-WM	Flow divider
Material	1.4404 (316L) St. Steel (all housing components blasted and post-treated)		
	Thread connection 1.4301 (304) St. Steel		
Housing connections	Thread connections, welded ends, flanged connections, clamp connections, aseptic flanged connections		
	Other connection types available on request		
Piping classes	Metric in accordance with DIN 11850		
	Imperial OD in accordance with ISO 2037/BS 4825 Part 1		
	Imperial IPS in accordance with Schedule 5		
Surfaces	Surfaces that come into contact with product: Ra ≤ 0.8 µm; fine-blasted surface		
Plug characteristic	Standard: equal percentage or linear		
Rangeability	40 : 1		
Seat leakage	Metal sealing: class IV (0.01 % of kvs)		
	Soft sealing: class VI		
Plug	1.4571 (316Ti) St. Steel (superfinished; guiding surfaces roller burnished)		
Seat	1.4404 (316L) St. Steel		
Stem seal	EPDM sealing rings; temperature range: –30 to +135 °C; FDA compliant		
	Resistance: 2 to 5 % resistance to alkaline solutions and acids up to +85 °C		
	Other materials (FPM, HNBR etc.) available on request		
Options	Sterile lock, diaphragm seal		
Material certificates	Inspection certificate in accordance with EN 10204 / 3.1		
	Material certificate EN 10204 / 2.2		

2193152 01 04.13.1 · Subject to change without notice

ARCA Regler GmbH
Kempener Strasse 18, D-47918 Tönisvorst
Phone +49 (0)2156-7709-0, Fax +49 (0)2156 7709-55
www.arca-valve.com, sale@arca-valve.com

ARCA Flow Group worldwide: Competence in valves, pumps & cryogenics

ARTES VALVE & SERVICE · feluwa COMPETENCE IN PUMPS · von Rohr Armaturen AG · von Rohr ARCA BV · WEKA

ARCA VALVES quality engineered control valves