ECOTROL® control valve

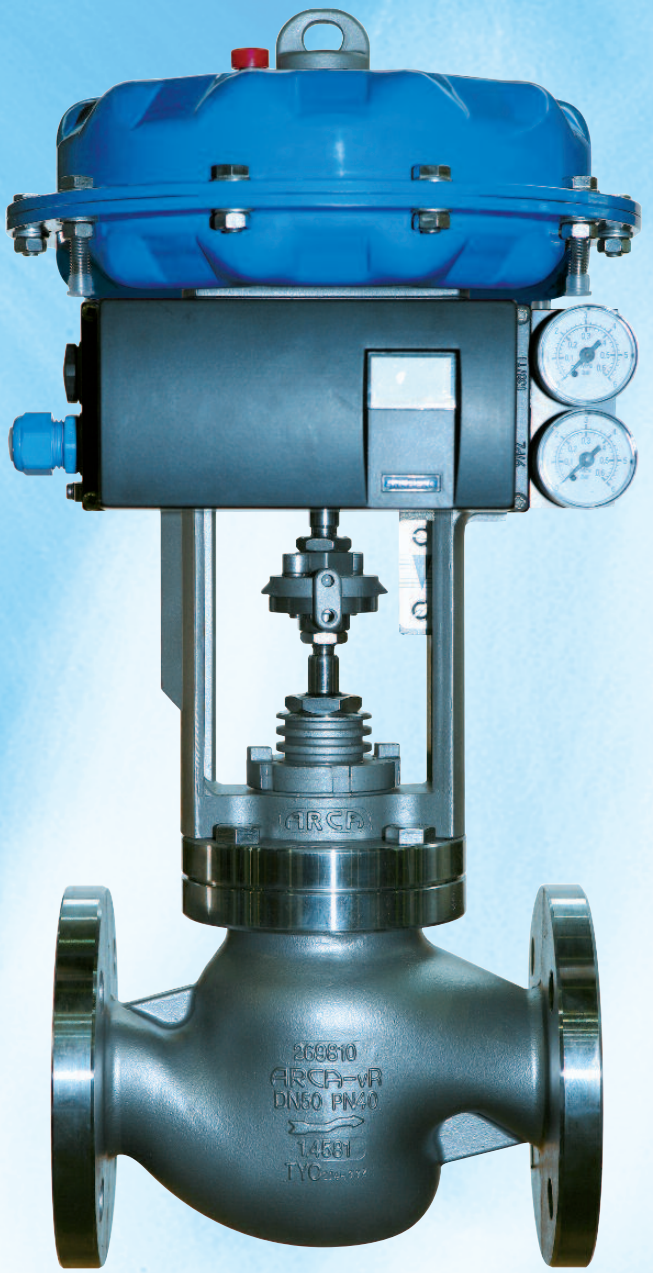

ARCA VALVES
quality engineered control valves

ECOTROL® control valve

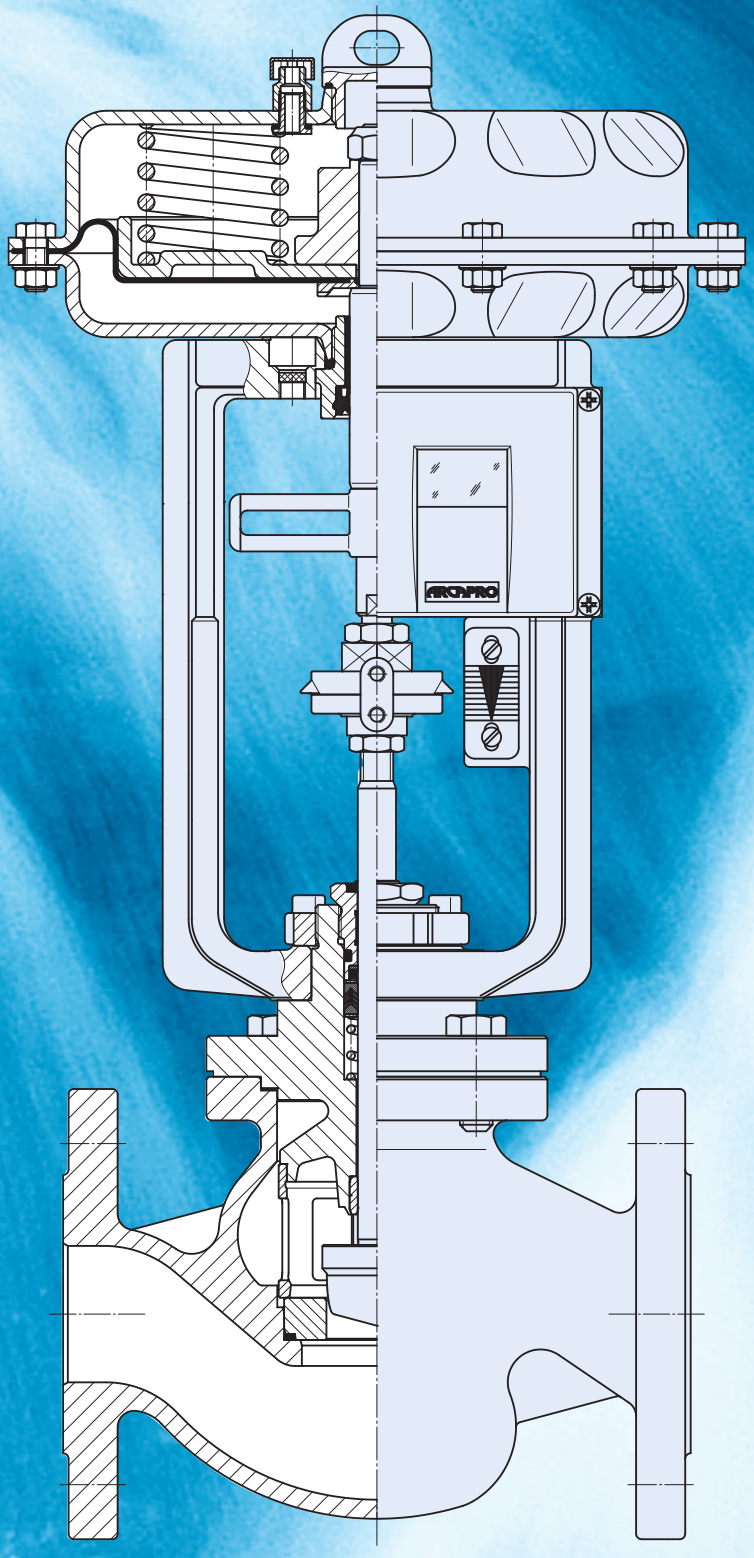

Committed to perfection in every detail

Powerful valve actuator
The pneumatic multi-spring 812 series actuator shown here is deployed in many applications as a standard actuator. Not only is it robust and explosion proof, it also provides short stroking times, a constant seating force, and is cost effective. The actuator is available in different sizes optimized in line with required actuating force. ECOTROL® control valves are also available with optional electric or electrohydraulic actuators. For more details, see the ARCA actuators brochure.

Multi-functional positioner
The ARCAPRO® digital positioner is a multi-functional interface with the controller or process control system and operates as standard with 4–20 mA. HART, Profibus (PA), and Foundation Fieldbus communication are used to establish a digital interface with bidirectional data exchange (including status messages). It can be parameterized on site or via the communications system. An open mechanical interface concept that we helped elaborate complies with VDI/VDE 3847 and is used for mounting and mechanically connecting the positioner to the actuator. For more details about this and the optional analog positioners, see the ARCA positioners brochure.

Reliable stem seal
Depending on the process fluid, pressure and temperature, we can advise you on the most suitable stem seal – from the stuffing box to the hermetically-tight bellows sealing – so that your system remains completely leak proof. The stem surfaces, packing material, and design complement each other perfectly, which means that friction, corrosion, and emission limit values are not an issue.

Fixed-form housing seal
The connection between the valve housing and the bonnet is established in the force bypass. This helps prevent mistakes during assembly and ensures that the housing seal is fully enclosed, thereby preventing it from yielding. This housing/bonnet design also ensures that the valve seat and plug are not subject to any lateral forces, which helps prevent leakage.

Robust, high-precision inner parts
The ECOTROL® control valves are equipped with inner parts specially designed for the prevailing flow conditions in your plant. The shapes of the closure members and valve seats as well as the material from which they are made are optimized in line with your requirements. A key technical feature here is the unique quick-exchange system that enables your service personnel to replace the clamped valve seat without the need for special tools. The metal or compressible seal for the valve seat and the float-mounted seat ring ensures long-life seat tightness. As an option a symmetrical seat ring, which can be used on both sides, is available. This cuts costs dramatically not only with the ceramic version for abrasive media.

Stem seals

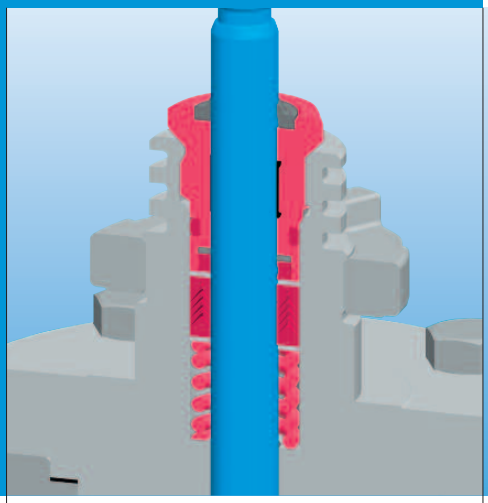

Maintenance-free PTFE V-ring packing with precision sealing element

This packing system comprises graphite reinforced and virgin PTFE V-rings, which makes them immune to strongly fluctuating operating temperatures. The corrosion-resistant preload spring located under the packing allows the stem seal to adjust itself automatically and ensures sufficient sealing force even at low pressures. An elastomer precision sealing element seals the device up to the stuffing box, while a wiper ring protects against the ingress of dirt.

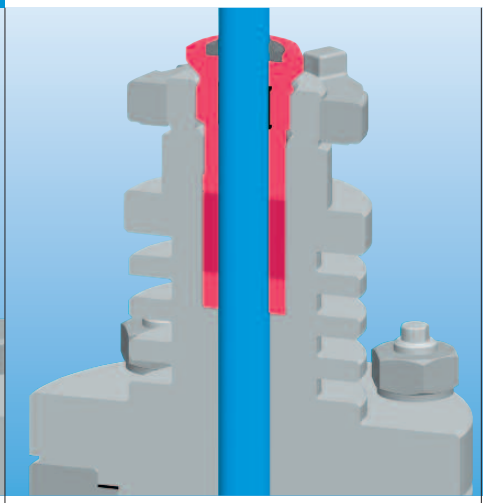

Adjustable stuffing box with packing rings

Different packing materials are available for the adjustable stem seal. The required sealing force can only be ensured over the long term, however, when the individual packing rings or cords are pressed with equal load. Thanks to the patented ARCA-OPTIPRESS® preloading device, the packing rings are all compressed with constant preload, with the result that the sealing effect is properly distributed over the packing length.

ECOTROL® control valve

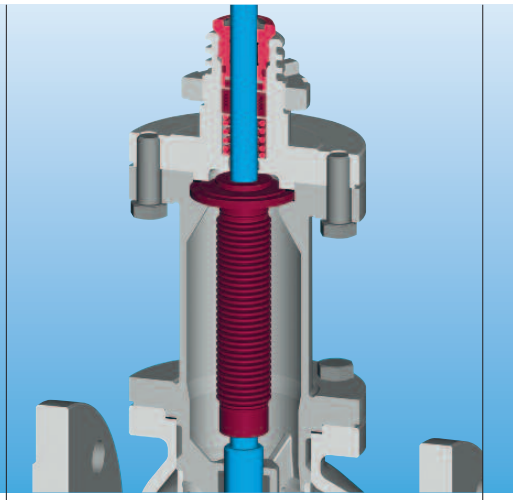

Bellows seal

If hermetic sealing is required, our specially developed bellows seal is the perfect solution. The stainless steel bellows is welded on the bottom with the valve stem and on the top with the bellows plate so that it is hermetically tight. For safety reasons, an additional stuffing box with standard life loading packing is provided. An optional control connection for alarm, flushing, or siphoning equipment can also be installed between the metal bellows and safety packing to ensure maximum operational reliability even if the metal bellows fail.

Valve trims

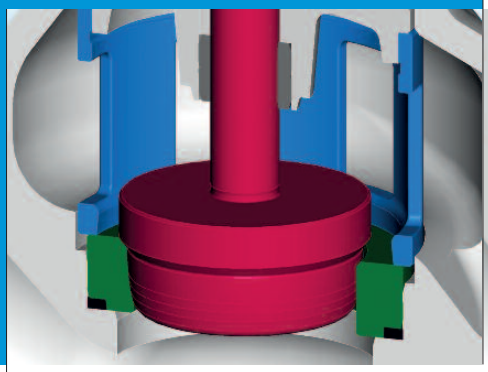

Standard contoured plug

For a laminar or turbulent flow, the single-stage, dirt-resistant contoured plug is the ideal solution. The characteristic of the contoured plug can be adjusted as required. The standard trim is metal-seated. The seat ring is rotationally symmetric and can be supplied as an option with two seating surfaces. This means that when one of the seat faces has worn, you can simply turn the seat ring around. This can be easily carried out on site and without the need for special tools. To prevent corrosion due to cavitation and high pressures, the (single or multi-stage) contoured plug and the seat ring can also be made from highly wear-resistant ceramic materials. A low-noise perforated cage can help reduce noise.

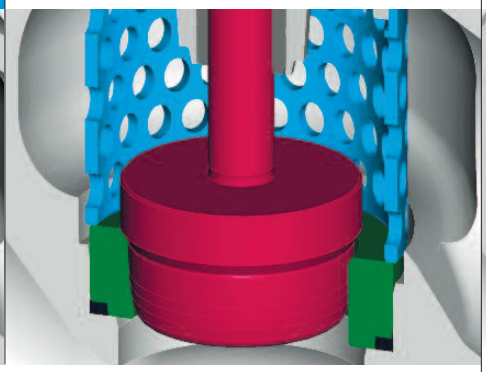

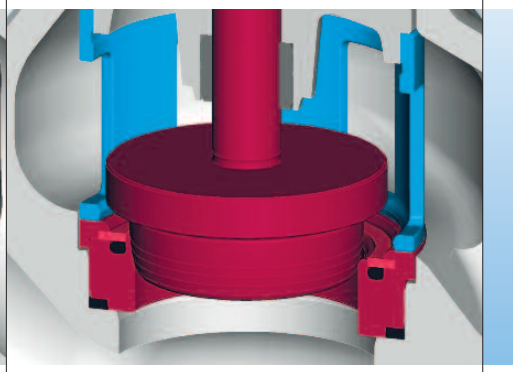

Soft seat with metal support

To ensure that even with oversized actuators the soft seal remains tight over long periods of operation, we have developed the patented ECOTROL® soft seal with an additional metal seal between the seat and plug. This ensures that the surface pressure of the PTFE soft sealing element remains at a permissible level and protects the PTFE sealing element against «cold flow». The defined pretension of the sealing element is achieved by means of an O-ring spring suspension. With over 1 million operating cycles, this soft seal design has proved to be highly reliable.

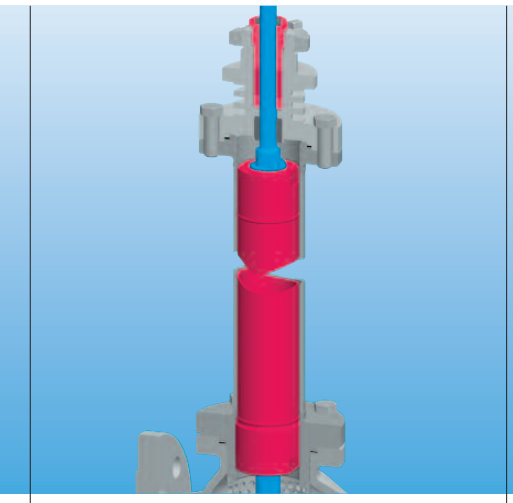

Low temperature extension

At low temperatures, sufficient distance must be maintained between the valve actuator and the valve itself. To provide protection against these icy conditions, we offer a special stem extension housed in a thin-walled insulation column. The stem extension is filled with an insulator, which minimizes loss caused by thermal conduction and radiation. The length of the extension can be adapted in line with your specific plant requirements.

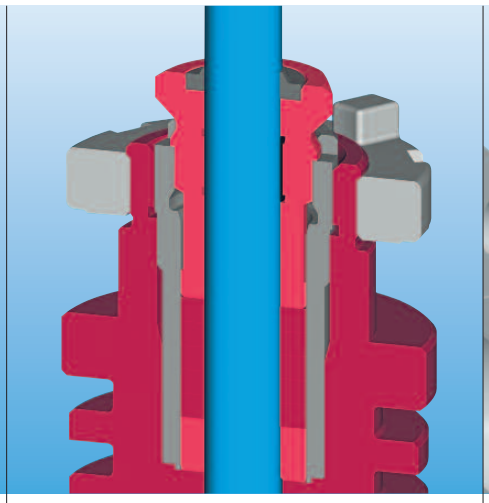

Cooling fins for high temperatures

At operating temperatures of above 250 °C, multiple cooling fin sets can be used in conjunction with graphite packing. These allow heat to escape, thereby ensuring that the packing does not overheat. At operating temperature of above 450 °C, the customized design of the cooling fin set ensures that, in a worst case scenario, the temperature within the packing does not exceed 450 °C.

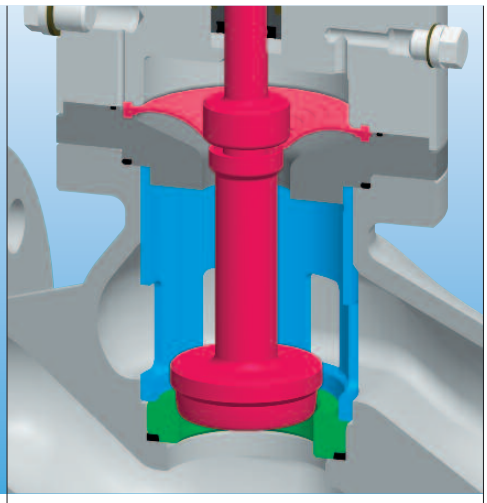

OPTISEAL® diaphragm seal for hazardous media

The OPTISEAL® diaphragm seal with additional safety stuffing box prevents hazardous media from escaping. This is the ideal solution if metal bellows can potentially be destroyed in critical applications by particles which become lodged in the bellows winding. OPTISEAL® fixes a hydraulically-supported diaphragm between the valve housing and bonnet, and between the stem and plug. Thanks to the hydraulic support, the diaphragm can withstand operating pressures of up to 100 bar.

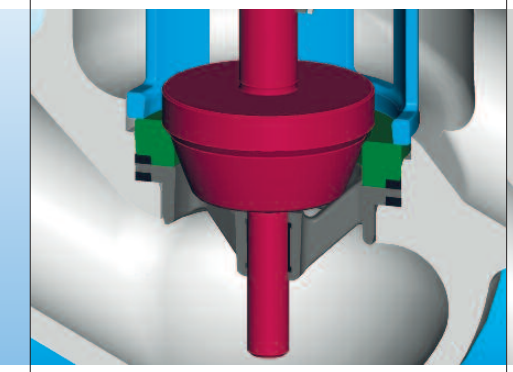

Double guided contoured plug

Due to the Bernoulli Effect, liquids with a high differential pressure can cause the valve plug to vibrate. This can be counteracted, however, by means of an integrated bottom guide. This innovative design ensures that there is no additional sealing area on the outside. The bottom guide is open and, therefore, completely dirt resistant. Thanks to the ECOTROL® quick-exchange system, this component is also retrofitted to each standard valve.

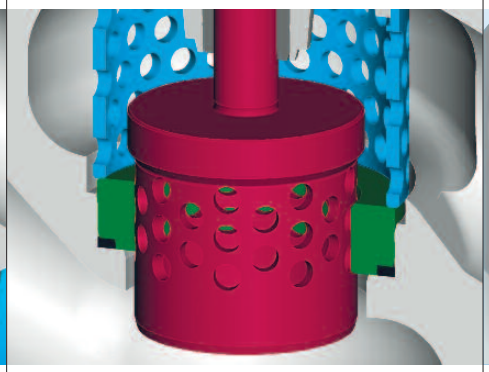

Perforated plug and cage

For liquid and compressible media, perforated plugs and cages have proved to be the ideal solution for preventing noise and cavitation damage. Cavitation downstream of the perforation caused by gas bubbles imploding occurs in the center of the perforated plug without damaging the trim or housing. This increases the service life and, in turn, the cost-effectiveness of control valves which are designed for high differential pressures and subject to harsh conditions. This also results in lower noise emissions, which can be reduced even further by means of a low-noise perforated cage.

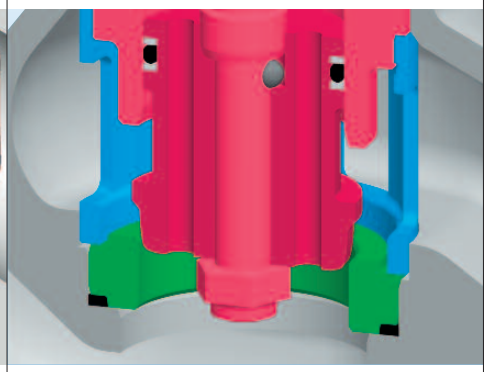

Pressure-balanced valve plug

Pressure-balanced valve trims are optimized for minimal actuating forces. The plug surface facing away from the valve seat is under the same pressure as the surface facing the valve seat. This is achieved by bores in the plug and dynamic piston sealing. An ECOTROL® control valve with a pressure-relieved plug can be operated even by very small actuators. Depending on the process conditions, the plug relief device is sealed by metal piston or elastomer rings.

Ensuring precision and efficiency

ARCA ECOTROL® offers a wide range of innovative solutions designed to fulfill all your control task requirements. Whether housing, inner valves, valve seats, stem seals, actuators, or positioners, every detail benefits from the know-how of expert engineers with many years' experience in a wide range of applications. Factors such as efficiency, control precision, price/performance ratio, weight, and lifecycle costs are optimized to suit your requirements. Our commitment to innovation in valve technology ensures that you benefit from high control precision and lower operating costs. Why not see for yourself!

ECOTROL® control valve

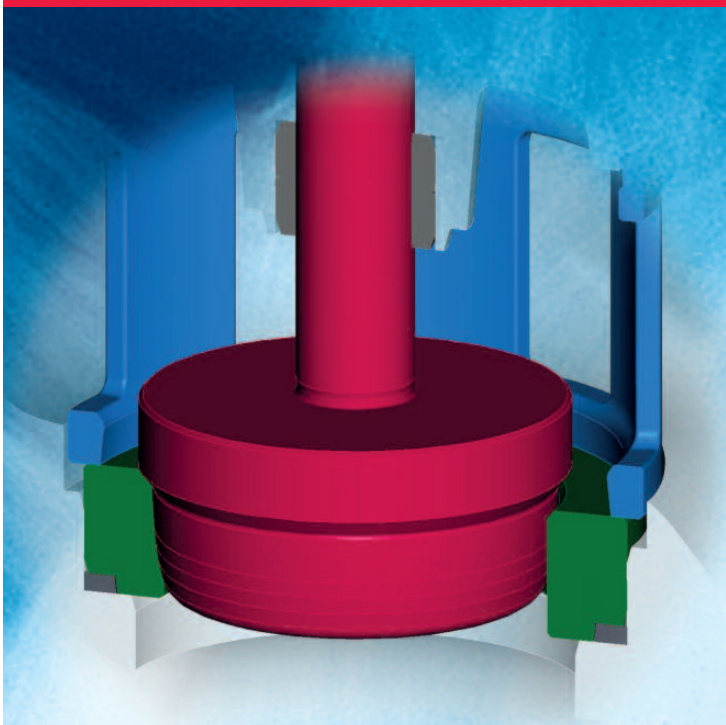

Our innovations	How you benefit
1 Patented valve seat with PTFE soft seal and metal secondary seal	✔ Absolute seat tightness ✔ Defined preload ✔ Long service life
2 Seat rings made from a wide variety of materials	✔ Reproducible seat tightness due to self-centering ✔ Low wear and tear minimizes cost of spare parts
3 PTFE V-ring packing with additional precision sealing element	✔ Safety and hermetic sealing ✔ Low maintenance
4 Quick exchange system for seat rings and plugs	✔ Maintenance without special tools
5 Wide variety of valve trims optimized for all applications	✔ Maximum process flexibility with high control quality ✔ Low noise emissions
6 Stainless steel stuffing box area	✔ No galvanic corrosion
7 Flow-optimized valve housing	✔ High flow coefficients ✔ Low noise emission
8 Compact, robust design	✔ Minimum mounting space required ✔ Low weight

ECOTROL® control valve

ECOTROL® general specifications

Series	8C	6N	6H
DN	15–100 / ½"–4"	125–800 / 5"–32"	15–400 / 1"–16"
PN / ANSI class	10–63 / class 150–600	10–63 / class 150–600	100–250 / class 900–2500

Body material	EN	for temperatures	ASTM	for temperatures
	1.0619 GP240GH	–10 °C to 400 °C	A 216 WCB	–29 °C to 425 °C
	1.4408 GX5CrNiMo19-11-2	–29 °C to 400 °C	A 351 CF8M	–196 °C to 400 °C
	1.6220 G20Mn5	–50 °C to 345 °C	A 352 LCC	–50 °C to 345 °C
	1.6982 GX3CrNi13-4	–120 °C to 400 °C	–	–
	1.7357 G17CrMo5-5	–10 °C to 530 °C	A 217 WC6	–29 °C to 530 °C
Bonnet Material	≤ DN 65 made of 1.4408 (A351CF8M)			
	≥ DN 80 made from the same material as the housing but with a stuffing box sleeve made of 1.4571 (ANSI TP316TI)			
Plug characteristic	Standard: equal percentage or linear			
	Optional: modified linear			
Rangeability	50 : 1			
Double guide	Optional: integrated bottom guide for sizes DN 40 – DN 600, Kvs > 25			
Seat leakage	Metal sealing: leakage rate class IV (<0.01 % Kvs); optional leakage rate class V			
	Soft sealing: leakage rate class VI			
Bellows seal	Double walled, made of 1.4571 or (optional) Hastelloy® (for ANSI 150 and ANSI 300, other rated pressures available on request)			
Heating jacket	Connections DN 15 or DN 25 PN 40 (½" or 1" ANSI 300) screwed joints or flanges			

ECOTROL® standard inner valves

Material no.	Contoured plug P1	Contoured plug P1 with integrated bottom guide*	Perforated plug L1	Seat	Seat seal	max. permissible medium temperature
1	1.4571	1.4571	–	1.4571	Metal	In acc. with stem seal
2	–	–	1.4571	1.4571 nitrited	Metal	In acc. with stem seal
3	1.4122	1.4122	–	1.4021	Metal	In acc. with stem seal
4	–	–	1.4122	1.4021 nitrited	Metal	In acc. with stem seal
5	1.4112 hardened	1.4112 hardened	1.4112 hardened	1.4112 hardened	Metal	In acc. with stem seal
6	1.4571	–	–	1.4571	PTFE/FKM	–20 °C ~ 180 °C
7	1.4571	–	–	1.4571	PTFE/EPDM	–29 °C ~ 140 °C
8	1.4571	–	–	1.4571	PTFE	–196 °C ~ 180 °C

* only as of ≥ 40 (1 ½") KVs ≥ 25 (Cvs ≥ 29)

2224101 03 09.16.1 · Subject to change without notice · © ARCA Regler GmbH. All rights reserved.

ARCA Regler GmbH
Kempener Str. 18, D-47918 Tönisvorst
Phone +49 (0)2156-7709-0, Fax +49 (0)2156 7709-55
www.arca-valve.com, sale@arca-valve.com

ARCA Flow Group worldwide: Competence in valves, pumps & cryogenics

ARTES VALVE & SERVICE · feluwa KOMPETENZ IN PUMPEN · von Rohr Armaturen AG · von Rohr ARCA BV · WEKA

ARCA VALVES quality engineered control valves