Control valves



ARCA VALVES
quality engineered control valves

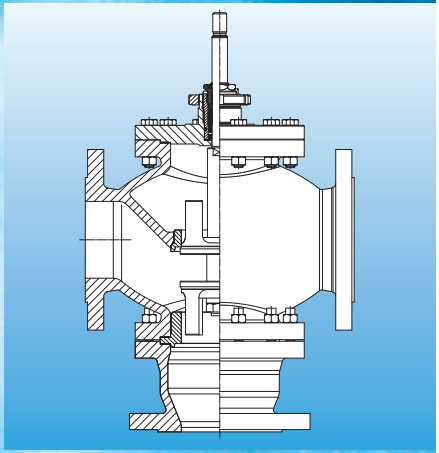

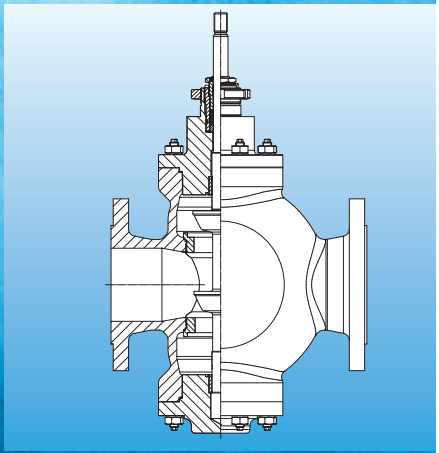

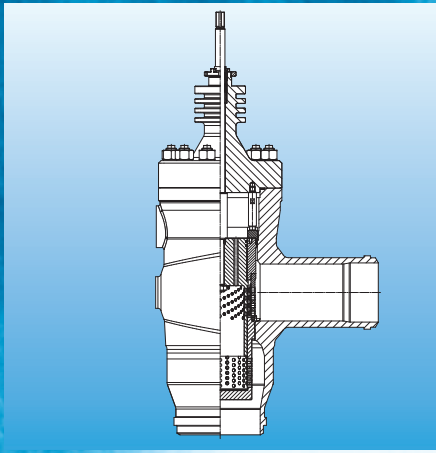

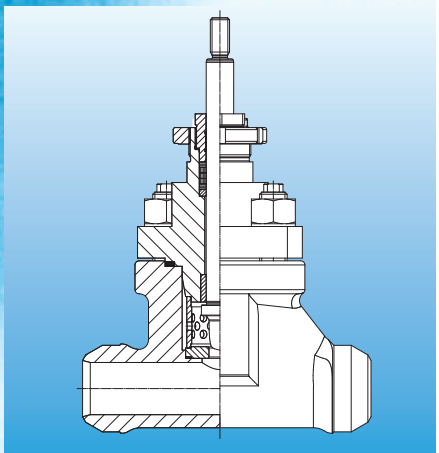

Control valves from the ARCA modular parts system

Three-way control valves
The ARCA three-way control valve is designed to be used as a three-way or mixing valve, depending on the application. As a three-way valve, the incoming medium is split into two individual flows. This split can be 1:1 or a different ratio can be used. As a mixing valve, two media are mixed in the valve housing and exit the three-way valve in the desired new state.

Double-seat control valves
The ARCA double-seat control valve is characterized by its simple and robust design, featuring a double guided trim, and is used for larger volumetric flows. The flow is controlled at two ports, whereby both plug diameters are coordinated such that the medium exerts an opening force on the one plug and a closing force on the other and the actuating forces almost compensate each other out as a result. The plugs can take a variety of shapes to meet application requirements.

Angle valves
The ARCA angle valve is used in very specific plant applications. The ARCA modular parts system therefore integrates housings made from different cast and forged materials so that a wide variety of requirements can be met. The internals, however, always follow the same basic clamped principle of the ECOTROL® series. The process fluid flows into the angle-control valve from the side or the bottom and exits after just one deflection.

Forged valves
ARCA forged valves are made from a forged block or a dye-forged housing. Defining characteristics is the large selection of housing materials and the resulting increase in structural safety. Forged control valves are especially used in conjunction with welded ends, since they can be connected directly to the piping here. The internals also follow the basic clamped principle of the ECOTROL® series.

A wide variety of pneumatic and electric actuators, such as the series 812 pneumatic actuator, is available to precisely operate all control valves listed here.

Three-way control valves: 200 and 220 series

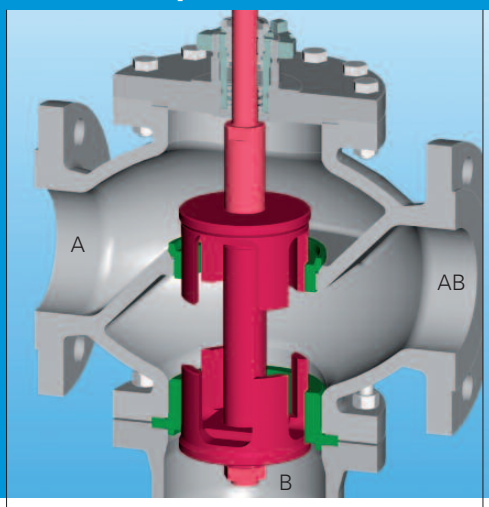

Flow divider

The fluid enters the valve housing laterally (AB), where it splits into a downward (A) and a straight-through (B) flow. Both opposed plugs have the same seat diameter and are thus pressure equalized on the static side. The ARCA design always features a double guide to also accommodate more demanding applications. The actuator then only needs to be dimensioned for the forces resulting from the differential pressure, dead weight, and packing friction.

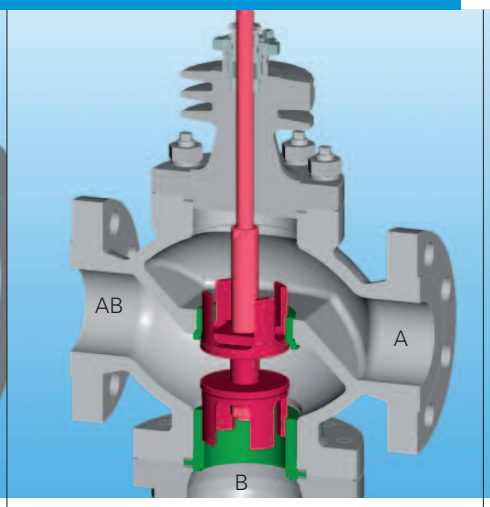

Flow mixer

The fluid enters the valve housing laterally (A) and from the bottom (B) and mixes in the valve housing before it exits the body of the valve (AB) at the side. This is a typical application for temperature controllers. The ARCA modular parts system covers temperature applications to 530 °C for the three-way control valve, meets nominal pressure requirements of up to 250 bar (PN 250), and features cooling fins in the bonnet area. The inner construction corresponds to the modular design of the flow divider and is identical from an actuator perspective.

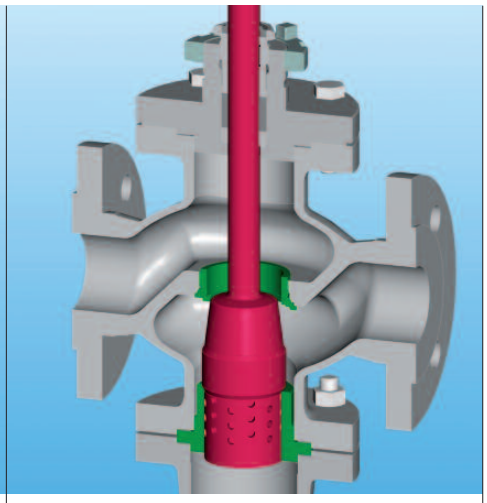

Further applications

The ARCA modular parts system offers a wide variety of combination options for temperature, pressure, and flow. In the example shown, the incoming process fluid flows through in a straight line under low differential pressure and is regulated to the bottom outlet under high differential pressure. The perforated plug can respond to different flow coefficients with the right perforated pattern and safeguards bottom guidance. Many applications are possible. Contact us for more information!

Angle-control valves: 350 and 380 series

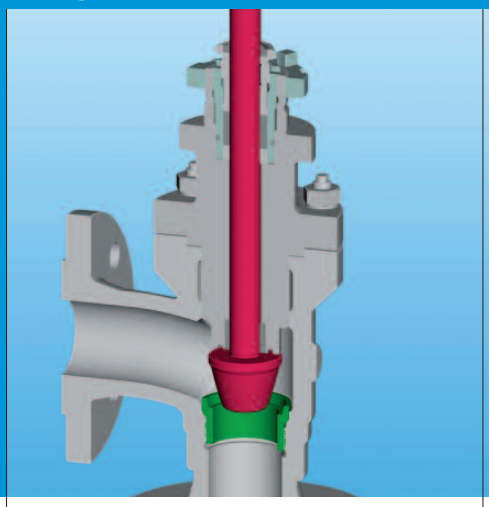

Angle-control valve

The ARCA modular parts system includes a cast model as a basic version. This cast housing series meets the requirements of basic applications. The plug used is a single-step parabolic plug. Stem sealing can be realized with cooling fins or bellows in addition to the standard bonnet, whereby the packing is selected based on the application. Further options such as a heating jacket can be added.

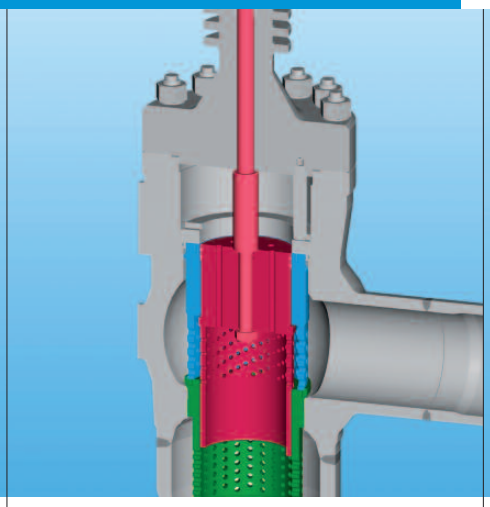

Angle-control valve

ARCA not only offers angle-control valves in low-pressure design, but also ones rated to a nominal pressure of 250 bar (PN 250). Several cast models are available for different materials and can withstand temperatures up to 600 °C. The base design integrates buttweld ends to allow the housings to be adapted for individual application requirements. Different valve trims are available, all of which feature the proven clamped seat ring design. Bonnet seals include all common versions through to a self-sealing pinch cap from Brettschneider.

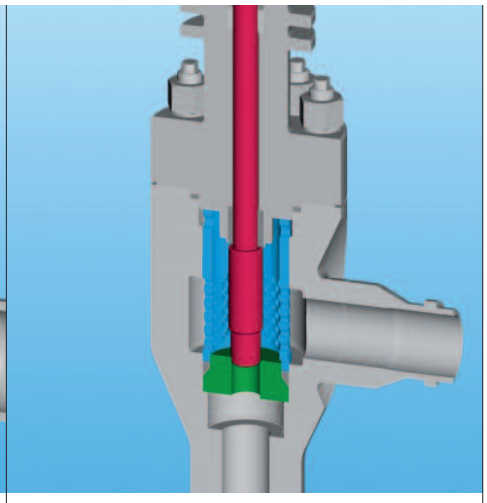

Angle-control valve

ARCA cast models cannot always serve all of your applications, which is why several forged housings have been designed around proven, standardized valve trims and bonnets. Your specific material, pressure, and temperature requirements are met, thanks to a nominal pressure rating of more than 250 bar (PN 250) and a temperature range beyond 600 °C. Such performance allows ARCA to provide the optimal solution for all applications involving angle-control valves.

Double-seat control valves: 250 and 280 series

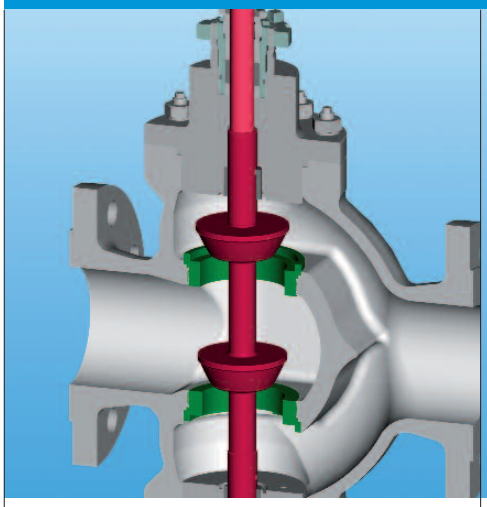

Double seat with parabolic plug

This double-seat control valve divides and controls the process fluid using two parabolic plugs. The proven double-guided parabolic plug design is frequently used for applications involving water and impresses with its robust and simple construction. The exterior dimensions of the parabolic plugs are virtually identical by design, making them almost pressure equalized. The full cone diameter does not need to be considered in dimensioning the actuating force, but only the resulting ring gap, allowing use of smaller actuators.

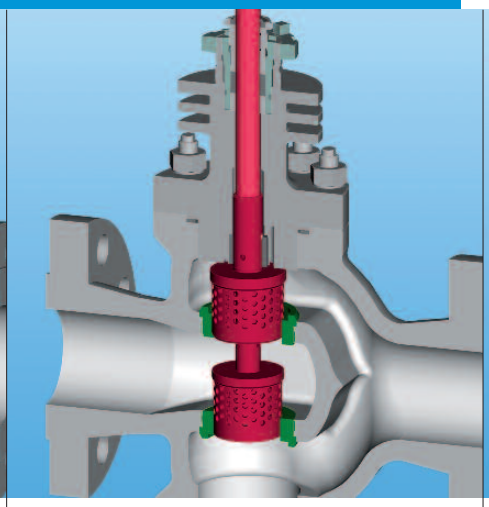

Double seat with perforated plug

As with all ARCA series, the modular double-seat control valve is available in many versions, meets nominal pressure requirements up to a nominal pressure of 160 bar (PN 160), and is compatible with temperatures to 530 °C. This valve is a high-pressure double-seat control valve that has cooling fins in the bonnet so that the stuffing box remains outside the hot area. Fluid control takes place via perforated plugs, which are used in place of traditional parabolic plugs to reduce noise. Small actuators are also specified for this model so that high differential pressures can be regulated.

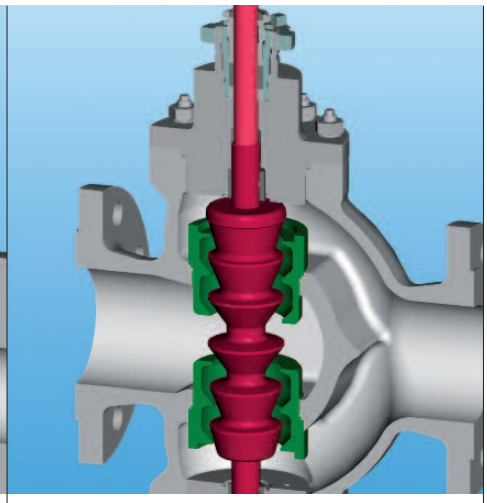

Graduated double seat

The ARCA modular parts system facilitates a multi-stage pressure drop to accommodate higher differential pressures and applications for which the purity of the medium cannot always be ensured. This version allows you to depressurize the medium without cavitation, for example. The design of the double-seat control valve eliminates the need for a pressure-relief facility and shall be preferred if the process fluid is slightly contaminated. Small actuators are of course used for the double-seat control valves.

Forged valves: 180 series

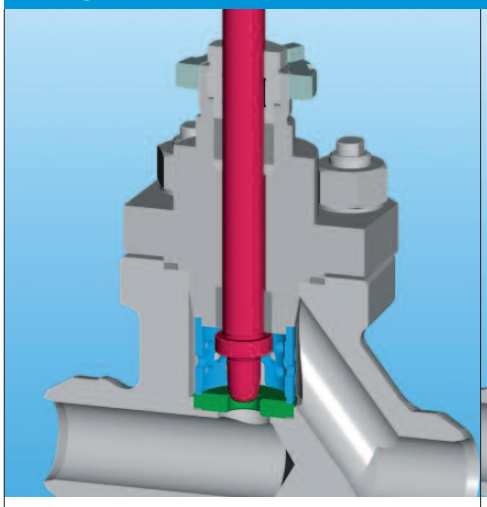

With parabolic plug

The control valves for the basic version are available in different nominal sizes and designed in accordance with the ECOTROL® principle. Proven, standardized, and diverse valve trims ensure that internal leakage between the seat and housing are a thing of the past. The forged valve housings can be ordered with buttweld ends or conventional flanges. The bonnet affixed in the force bypass can be used to install all ARCA actuators.

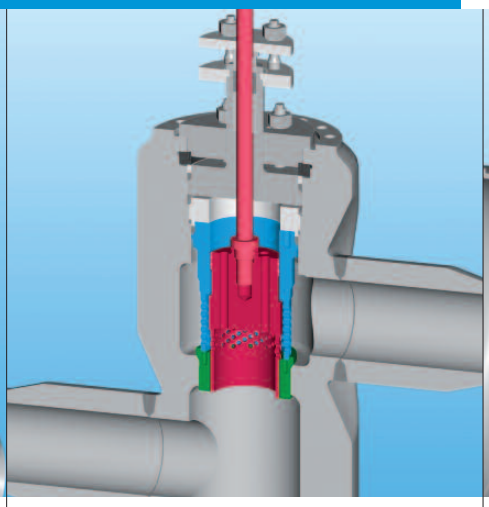

Multistage perforated plugs

The globe style control valve is available in the classic straight or Z configuration, depending on the pipe layout. Here, too, ARCA can offer a coherent concept. The forged housing is designed and adapted to specific conditions and requirements based on the proven valve trim and wide variety of designs and bonnets.

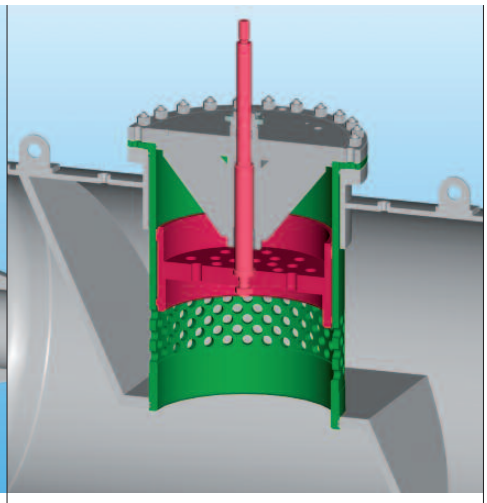

With perforated plug

ARCA can also assist with its standardized design concept when it comes to large valves. The dimensions of this design are largely unrestricted. You specify the nominal width and version needed by your application. The design concept is pursued and implemented far beyond control requirements, whereby the conditions for transport and on-site commissioning are taken into account and ensured during the design stage.

Master of variety

ARCA rounds off its valve program with these control valves and offers three-way, double-seat, angle, and forged valves in addition to the classic valve line. This variety is what makes us the ideal partner for complete control valve packages.

While ARCA uses a design principle to standardize these valves, it also ensures that each series offers its own, unique benefits and variety for your process – from materials and piping system connections to numerous valve trims that regulate your medium in line with the application.

ARCA's complete selection of actuators and controllers is available to meet your control requirements.

Control valves



Our Innovations	How You Benefit
1 Modular parts system with standardized components	✔ All nominal diameters ✔ Fewer components ✔ Only one special tool required
2 Flow-optimized housings	✔ Low levels of noise emission ✔ Optimized flow coefficients for all nominal diameters
3 Optimized valve trim comprising cone and seat for all application areas	✔ Adaptable to any requirements ✔ High control accuracy ✔ Wide control range ✔ Low levels of noise emission
4 Standardized interface to valve actuator	✔ All types of actuator can be used – pneumatic, electric and hydraulic ✔ Can be easily reconfigured later on
5 Value trims can be completely removed	✔ Maintenance work is fast and simple ✔ All internal parts can be removed ✔ No special machines required ✔ All interior components are clamped or screwed (no welding)
6 Always the right package	✔ Safety and hermetic sealing ✔ Maintenance free
7 Valve plug and stem can be replaced separately	✔ Reduced storage ✔ Cost-effective plug replacement

Control valves

Additional valves – Technical data

Design	Three-way		Double-seat		Forged		Angular	
Type	200	220	250	280	180		350	380
DN (housing)	25–600	25–300	50–350	40–250	15–100	150–1200	15–300	25–400
PN	10–40	63–160	10–40	63–160	10–250	10–40	10–250	10–400
Housing type/design	Three-way		Straight-way		Straight-way		Angle	
Housing material	Cast		Cast		Forged		Cast	Forged

Materials

	EN	**for temperatures**	**ASTM**	**for temperatures**
Housing – cast	1.0619 GP240GH	up to 450 °C	A 216 WCB	up to 450 °C
	1.7357 G17CrMo5-5	up to 530 °C	A 217 WC6	up to 530 °C
	1.4581 GX5CrNiMoNb19-11-2	up to 550 °C	–	–
	1.7379 G17CrMo9-10	up to 580 °C	–	–
	1.4931 GX23CrMoV12-1	up to 600 °C	–	–
	2.1050 G CuSn10	–196 up to 300 °C	–	–
Housing – forged	1.0460 P250GH	up to 450 °C	A 105	up to 450 °C
	1.0425 P256GH	up to 450 °C	–	–
	1.5415 16Mo3	up to 530 °C	–	–
	1.7335 13CrMo4-5	up to 570 °C	A 182 F12 Cl.2	up to 570 °C
	1.7383 11CrMo9-10	up to 600 °C	A 182 F22 Cl.3	up to 600 °C
	1.4903 X10CrMoVNb91	up to 620 °C	A 182F91 - P91	up to 620 °C
Valve trims	1.4021 X20Cr13			
	1.4122 X39CrMo17-1			
	1.4571 X6CrNiMoTi17122			
	1.4922 X20CrMoV1 21			
	2.0966 / 2.0550			
Bonnet	Standard			
	With cooling fins			
	Self-sealing pinch cap			
	With stuffing box control/sealing fluid connection			
	With bellows			
Plug characteristic	Standard: linear or equal percentage			
	Optional: linear, modified			
Rangeability	25:1 / 50:1			
Seat leakage	Metal sealing: leakage rate Class IV (0.01% of flow coefficient			
	Metal sealing: double-seat, type 250 Class III (0.1% of flow coefficient)			
	Soft sealing: Class VI			
Options	Double guide, heating jacket, ANSI classes, additional materials			

3084405 01 05.15.1 · Subject to change without notice · © ARCA Regler GmbH. All rights reserved.

ARCA Regler GmbH
Kempener Strasse 18, D-47918 Tönisvorst
Phone +49 (0)2156-7709-0, Fax +49 (0)2156 7709-55
www.arca-valve.com, sale@arca-valve.com

ARCA Flow Group worldwide: Competence in valves, pumps & cryogenics

ARTES VALVE & SERVICE · feluwa COMPETENCE IN PUMPS · von Rohr Armaturen AG · von Rohr ARCA BV · WEKA

ARCA VALVES quality engineered control valves