FluoroSeal Inc.









PLUG VALVES

PLUG VALVES CATALOGUE

TABLE OF CONTENTS

	Page
Design Features	A1
Sleeved Plug Valves — Components	A4
Sleeved Plug Valves — 2-Way	BA1
ANSI/ASME Class 150 lbs Flanged	BA2
ANSI/ASME Class 300 lbs Flanged	BA2
ANSI/ASME Class 600 lbs Flanged	BA3
DIN PN 16 & PN 40	BA3
ANSI/ASME Class 150/300/600 lbs Screwed Ends	BA4
ANSI/ASME Class 150/300/600 lbs Socket Weld Ends	BA4
ANSI/ASME Full Port Class 150 lbs Flanged	BA5
ANSI/ASME Full Port Class 300 lbs Flanged	BA6
ANSI/ASME Full Port Class 600 lbs Flanged	BA6
Sleeved Plug Valves — Multiport	BB1
Flow Arrangements	BB2
ANSI/ASME Multiport Class 150 lbs Flanged	BB2
ANSI/ASME Multiport Class 300 lbs Flanged	BB3
ANSI/ASME Multiport Class 150/300/600 lbs Screwed Ends	BB3
ANSI/ASME Multiport Class 150/300/600 lbs Socket Weld Ends	BB4
Multiport DIN PN 16 & PN 40	BB4
Sleeved Plug Valves — Severe Service (FE)	BC1
Severe Service (FE) ANSI/ASME Class 150/300/600 lbs	BC4
Sleeved Plug Valves — Special Service	BD1
Caged Control Plug Valves	BD2
Special Cleaning Plug Valves	BD3
Double Block & Bleed and Sampling Plug Valves	BD4
Fire Safe Sleeved Plug Valves	BD5
HF Alkylation Plug Valves	BD6
Lined Plug Valves	C1
ANSI/ASME Lined Class 150 lbs Flanged	C4
Plug Valves — Options	D1
EZ-SEAL®	D2
Jacketed Plug Valves	D4
ANSI/ASME Fully Jacketed Class 150 lbs	D5
ANSI/ASME Fully Jacketed Class 300 lbs	D5
ANSI/ASME Fully Jacketed Class 600 lbs	D5
Partially Jacketed Plug Valves	D6
V-Port & Characterized Plugs	D7
Accessories	E1
Handwheel Extension — Gear Operator	E2
T-Wrench and Extension Option	E2
Crank Handle	E2
Stem Extension — Gear Operator	E3
Chain Wrench	E3
Chain Wheel	E3
Locking Devices	E4
Technical Data	F1
FluoroSeal Inc. Corporate Profile	**G1**
Sleeved Plug Valves Ordering Instructions	H1
Terms & Conditions	I1

NON-LUBRICATED PLUG VALVES

FluoroSeal®, Non-Lubricated, Sleeved Plug Valves incorporate state-of-the-art PTFE fluorocarbon seat design. With little required maintenance and trouble-free operation, a high integrity bubble-tight seal is provided both in-line and to atmosphere. The engineered design features contributing to the superiority of our product are described as a function of their specific purpose to ensure a trouble-free extended life.

LEAK-FREE PERFORMANCE

PTFE fluorocarbon, utilized in the FluoroSeal® sleeve and top seal components, is universally resistant to corrosive media, being inert to all but a few rarely encountered chemicals. It is a thermoplastic that can be used at a continuous service temperature of 400°F (204°C) and much higher temperatures can be satisfactorily sustained for shorter periods. Having a very low friction coefficient it is self-lubricating, negating the need for any other form of lubrication. Since PTFE is susceptible to deformation or cold flow as it is put under load, and as it becomes more pliable at elevated temperatures, precaution is taken to control this activity for the valve's intended purpose.

The FluoroSeal® internal body configuration has been designed to totally contain all the edges of the PTFE sleeve at the top, bottom, and around the entire port opening adjacent to the waterway. Any tendency of the sleeve to grow is accommodated by relief recesses designed for this purpose and positioned at 90 degrees to the body port openings. The port-defining metal lips protect the PTFE sleeve from erosion and any possibility of sleeve rotation within the body.

The waterway in the body has been designed with a contour providing a flow path that assures minimum flow turbulence characteristics. The critical sealing areas around the top and bottom of the sleeve and around the body port openings are maintained by means of an adjustable tapered plug compressing the PTFE sleeve over raised ribs.

The PTFE top seal components are similarly contained and protected from damage. A counter bore is provided at the top of the metal body to encapsulate the outside diameter of the formed PTFE diaphragm in conjunction with the formed metal diaphragm and to protect it from rupturing by regulating the amount of compression at this point.

The inside diameter of the formed PTFE diaphragm, adjacent to the plug stem, is also contained by means of a unique lip design of the formed metal diaphragm preventing extrusion and maintaining the stem seal throughout variable service conditions. This uniquely formed metal diaphragm also provides a positive electrical ground between the plug and body, eliminating the need for an extra component to fulfill this function as is the case for other valve manufacturers' designs.



ANSI/ASME Class 600 Lbs FluoroSeal® Plug Valve

EFFORTLESS EFFICIENCY

As a standard, three point external adjusting bolts in the cover assure equilibrium to the compression of the stem and in-line seals by imparting a balanced force through a metal thrust washer located under the cover above the formed metal diaphragm. This mechanism provides a multiple seal to atmosphere and a double (downstream & upstream) bi-directional in-line seal.

Independent wrench stops are cast on the cover to limit the stroke at the open and close positions without endangering the integrity of the seal adjustment as in other manufacturers' designs. Parallel flats are machined on the sides of the plug stem providing positive indication of the direction of flow at all times, independent of other position indicators.

Offered as an option on all ANSI/ASME FluoroSeal® valves, and standard on all DIN valves up to DN 150, is the EZ-SEAL® (patent pending) Top Seal and Adjustment System. Featuring a single point adjustment it eliminates the possibility of plug side loading. The EZ-SEAL® (patent pending) also introduces a new industry standard by the incorporation of a Min / Max gauge on the cover, giving a visual indication of the remaining service life of a valve and easing the process of maintenance planning.

PLEDGE OF QUALITY

All major pressure bearing and/or boundary components (body, plug and cover) of FluoroSeal® valves are fully traceable to mill test certificates ensuring material authenticity. Quality levels are maintained through continuous inspection and manufacturing surveillance of these and all other components. A concerted effort is made to conform to all regulatory authority requirements where and when invoked, in keeping with FluoroSeal Inc.'s pledge of quality first. FluoroSeal® Plug Valves comply with the following standards:

API 598	API 599	ASME B16.5
ASME B16.10	ASME B16.25	ASME B16.34
ASME B16.42	ASTM F1545-97	DIN EN 558-1
DIN EN 1092-1	DIN EN 12266	MSS SP-55
MSS SP-61	ISO/FDI 10497	

AT A GLANCE

- Bi-directional flow
- Quarter-turn operation
- Non-lubricated
- Self-cleaning on each operation
- 2-way and multiport configurations
- Special service and jacketed designs available
- All casting components traceable to mill test certificates
- Investment cast on all materials for sizes 1/2" – 10" (ANSI/ASME Class 150 lbs)

- Investment cast on all materials for sizes 1/2" – 6" (ANSI/ASME Class 300 lbs)
- Investment cast on all materials for sizes 1/2" – 6" (ANSI/ASME Class 600 lbs)
- Investment cast on all materials for sizes DN 15 – DN 150 (PN 16 – PN 40)
- Standard heavy-duty gears available on all FluoroSeal® valves

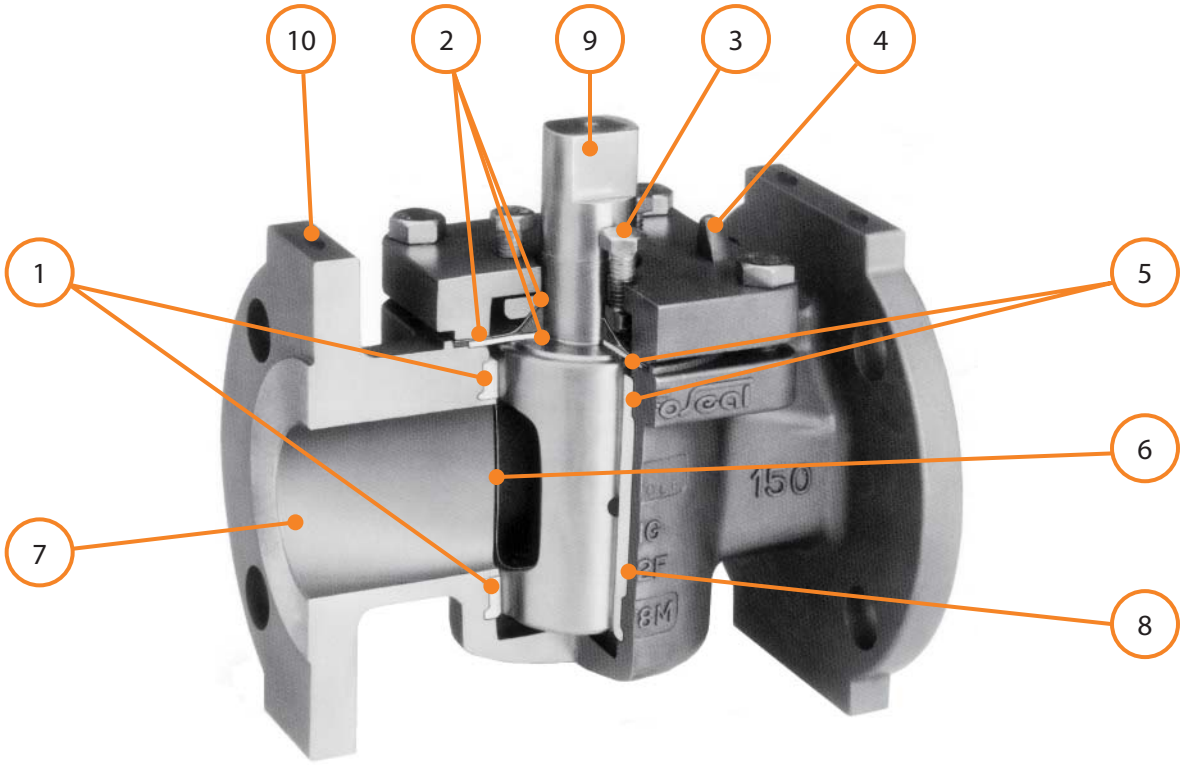

ANSI/ASME Class 150 Lbs FluoroSeal® Plug Valve Cut-Away

DESIGN FEATURES SUMMARY

1. Bi-directional in-line bubble-tight seal independent of line pressure
2. Multiple external bubble-tight seals independent of line pressure
3. Direct mechanical three-point adjustment independent of line pressure
4. Independent travel stops
5. Full encapsulation and retention of all leading edges of PTFE sleeve and top seal components
6. Full lip at port openings protects PTFE sleeve
7. Contoured waterway ensures minimum flow turbulence characteristic
8. No body cavities to entrap flow media
9. Positive flow direction indication
10. Drilled and tapped flange mounting pads independent of cover and top seal assembly



ANSI/ASME Class 150 Lbs FluoroSeal® Plug Valve with Wrench

MATERIALS OF CONSTRUCTION

Body and Plug[1]	As Specified
Cover[2]	Carbon Steel, 304 SS
Cover Bolts[2]	Carbon Steel, 304 SS
Adjusting Bolts	304 SS
Thrust Washer	304 SS
Metal Diaphragm[3]	304 SS, MONEL®
Delta Ring	PTFE Fluorocarbon
Diaphragm	PTFE Fluorocarbon
Sleeve[4]	PTFE Fluorocarbon
Wrench Operator[5]	Carbon Steel
Wrench Bolt[5]	Steel
Gear Assembly	Cast Ductile Iron Housing
Gear Adaptor[5]	Hi-Strength Steel
Gear Mounting Bracket	304 SS
Mounting Bracket Bolts[5]	Steel

1. See BODY & PLUGS MATERIAL TABLE for material selections.
2. Cover and bolt materials of standard valves will be supplied in accordance with the following table:

SPECIFIED BODY	COVER	ANSI/ASME COVER BOLT	DIN COVER BOLT
Ductile Iron	Carbon Steel	ASTM A193 Gr. B7	DIN EN 10269
Carbon Steel	Carbon Steel	ASTM A193 Gr. B7	DIN EN 10269
All Other Materials	CF8	ASTM A193 Gr. B8	DIN EN 10269

   Covers can be delivered in the same material as body if specified at time of order.

3. MONEL® metal diaphragms will be supplied with valves having a MONEL® or nickel trim. All others will be supplied with 304 SS diaphragms.
4. Glass reinforced PTFE (RTFE), PFA Fluorocarbon, GF2P, Hi-Temp, and UHMWPE sleeves are available on special order.
5. 304 SS available on special order.

FluoroSeal Inc.

Specialty Valves



SLEEVED 2-WAY

SLEEVED PLUG VALVES — 2-WAY

2-WAY ANSI/ASME CLASS 150 LBS

Flanged Ends
Wrench Operated
Actuators Optional on All Sizes

Dimensions to ANSI B16.5 & B16.10
E = Clearance required for resleeving measured from center line
EG = Enclosed gear operated
N = Number of holes
Two (2) top holes in flanges are tapped with UNC threads. See Hole-UNC column
[1] Six (6) top holes
* 2 1/2" valves are made from 3" casting, but flanges are machined to 2 1/2" dimensions

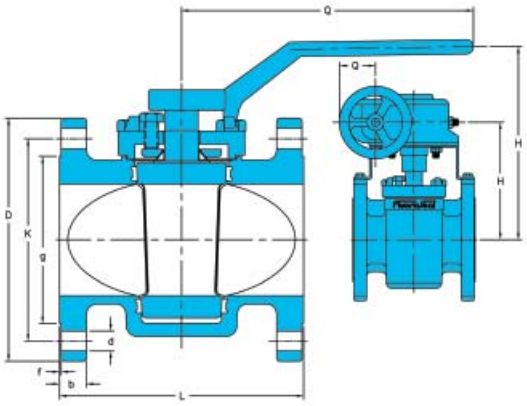

SIZE	L		H		D		K		g		b		f		d		Q		Weight		E		N	Hole-UNC
	in	mm	in	mm	in	mm	in	mm	in	mm	in	mm	in	mm	in	mm	in	mm	kg	lbs	in	mm	#	
1/2"	4.25	108.00	3.38	86.00	3.50	88.90	2.38	60.5	1.38	35.0	0.37	9.50	0.06	1.52	0.63	16.0	8.00	203.00	2.3	5.0	6.38	162.10	4	-
3/4"	4.63	117.50	3.38	86.00	3.88	98.50	2.75	69.9	1.68	42.9	0.37	9.50	0.06	1.52	0.63	16.0	8.00	203.00	2.7	6.0	6.38	162.10	4	-
1"	5.00	127.00	4.50	114.00	4.25	108.00	3.13	79.5	2.00	50.8	0.44	11.20	0.06	1.52	0.63	16.0	9.00	229.00	3.6	8.0	8.50	215.90	4	-
1 1/2"	6.50	165.10	5.31	135.00	5.00	127.00	3.88	98.6	2.88	73.2	0.56	14.20	0.06	1.52	0.63	16.0	14.25	362.00	6.4	14.0	10.38	263.70	4	-
2"	7.00	177.80	6.25	159.00	6.00	152.40	4.75	120.7	3.63	92.0	0.63	16.00	0.06	1.52	0.75	19.0	16.50	419.00	10.5	23.0	12.25	311.20	4	-
*2 1/2"	8.00	203.20	6.56	167.00	7.50	190.50	5.50	139.7	4.13	104.6	0.75	19.00	0.06	1.52	0.75	19.0	16.50	419.00	16.4	36.0	12.63	320.80	4	-
3"	8.00	203.20	6.56	167.00	7.50	190.50	6.00	152.4	5.00	127.0	0.75	19.00	0.06	1.52	0.75	19.0	16.50	419.00	16.4	36.0	13.63	346.20	4	-
4"	9.00	228.60	7.63	194.00	9.00	228.60	7.50	190.5	6.19	157.2	0.94	23.90	0.06	1.52	0.75	19.0	23.63	600.00	26.8	59.0	16.25	412.80	8	-
4" EG	9.00	228.60	9.10	231.00	9.00	228.60	7.50	190.5	6.19	157.2	0.94	23.90	0.06	1.52	0.75	19.0	7.25	184.00	35.9	79.0	17.63	447.80	8	-
6" EG	10.50	266.70	10.80	274.00	11.00	279.40	9.50	241.3	8.50	215.9	1.00	25.40	0.06	1.52	0.88	22.4	7.25	184.00	55.5	122.0	21.75	552.50	8	-
8" EG	11.50	292.10	12.75	324.00	13.50	342.90	11.75	298.5	10.63	269.8	1.13	28.70	0.06	1.52	0.88	22.4	9.75	248.00	100.0	220.0	26.63	676.40	8	3/4"-10
10" EG	13.00	330.20	14.68	373.00	16.00	406.40	14.25	362.0	12.75	323.9	1.19	30.20	0.06	1.52	1.00	25.4	9.75	248.00	150.0	330.0	31.25	793.80	12	7/8"-9
12" EG	14.00	355.60	16.40	417.00	19.00	482.60	17.00	431.8	15.00	381.0	1.25	31.80	0.06	1.52	1.00	25.4	13.75	349.25	198.6	437.0	33.75	857.30	12	7/8"-9
14" EG	15.00	381.00	17.40	442.00	21.00	533.40	18.75	476.3	16.25	412.8	1.38	35.10	0.06	1.52	1.12	28.4	13.75	349.25	295.0	650.0	34.75	882.70	12	1"-8
16" EG	30.00	762.00	21.29	540.72	23.00	584.20	21.25	539.75	18.50	469.90	1.38	35.05	0.06	1.52	1.13	28.58	9.85	250.19	-	-	46.00	1168.40	16	1"-8
18" EG	34.00	863.60	21.29	540.84	25.00	635.00	22.75	577.85	21.00	533.40	1.50	38.10	0.06	1.52	1.25	31.75	9.85	250.19	-	-	46.00	1168.40	16	1 1/8"-8
20" EG	36.00	914.40	27.43	696.70	27.00	685.80	25.00	635.00	23.00	584.20	1.62	41.15	0.06	1.52	1.25	31.75	9.85	250.19	-	-	57.63	1463.80	20	1 1/8"-8[1]
24" EG	42.00	1066.8	27.43	696.70	31.00	787.40	29.50	749.30	27.25	692.15	1.81	45.97	0.06	1.52	1.38	34.93	9.85	250.19	-	-	57.63	1463.80	20	1 1/4"-8

2-WAY ANSI/ASME CLASS 300 LBS

Flanged Ends
Wrench Operated
Actuators Optional on All Sizes

Dimensions to ANSI B16.5 & B16.10
E = Clearance required for resleeving measured from center line
EG = Enclosed gear operated
N = Number of holes
Two (2) top holes in flanges are tapped with UNC threads. See Hole-UNC column
[1] Four (4) top holes
* 2 1/2" valves are made from 3" casting, but flanges are machined to 2 1/2" dimensions

SIZE	L		H		D		K		g		b		f		d		Q		Weight		E		N	Hole-UNC
	in	mm	in	mm	in	mm	in	mm	in	mm	in	mm	in	mm	in	mm	in	mm	kg	lbs	in	mm	#	
1/2"	5.50	139.70	3.38	86.00	3.75	95.30	2.63	66.80	1.38	35.0	0.56	14.20	0.06	1.52	0.63	16.0	8.00	203.00	3.2	7.0	6.38	162.10	4	-
3/4"	6.00	152.40	3.38	86.00	4.63	117.60	3.25	82.60	1.69	42.7	0.63	16.00	0.06	1.52	0.75	19.00	8.00	203.00	4.1	9.0	6.38	162.10	4	-
1"	6.50	165.10	4.50	114.00	4.88	124.00	3.50	88.90	2.00	50.8	0.69	17.50	0.06	1.52	0.75	19.00	9.00	229.00	5.5	12.0	8.50	215.90	4	-
1 1/2"	7.50	190.50	5.31	135.00	6.13	155.70	4.50	114.30	2.88	73.2	0.81	20.60	0.06	1.52	0.88	22.40	14.25	362.00	9.5	21.0	10.38	263.70	4	-
2"	8.50	215.90	6.25	159.00	6.50	165.10	5.00	127.00	3.63	92.0	0.88	22.40	0.06	1.52	0.75	19.00	16.50	419.00	13.2	29.0	12.25	311.20	8	-
*2 1/2"	11.13	282.70	6.56	167.00	8.25	209.6	5.88	149.40	4.13	104.6	1.13	28.70	0.06	1.52	0.88	22.40	16.50	419.00	21.8	48.0	12.63	320.80	8	-
3"	11.13	282.70	6.56	167.00	8.25	209.6	6.63	168.40	5.00	127.0	1.13	28.70	0.06	1.52	0.88	22.40	16.50	419.00	21.8	48.0	13.63	346.20	8	-
4"	12.00	304.80	7.63	194.00	10.00	254.00	7.88	200.20	6.19	157.2	1.25	31.80	0.06	1.52	0.88	22.40	23.63	600.00	42.0	92.0	16.25	412.80	8	-
4" EG	12.00	304.80	9.10	231.00	10.00	254.00	7.88	200.20	6.19	157.2	1.25	31.80	0.06	1.52	0.88	22.40	7.25	184.00	54.0	119.0	17.63	447.80	8	-
6" EG	15.88	403.40	10.80	274.00	12.50	317.50	10.63	270.00	8.50	215.9	1.44	36.6	0.06	1.52	0.88	22.40	7.25	184.00	91.4	201.0	21.75	552.50	12	-
8" EG	16.50	419.10	12.75	324.00	15.00	381.00	13.00	330.20	10.63	269.8	1.63	41.40	0.06	1.52	1.00	25.40	9.75	248.00	141.4	311.0	26.63	676.40	12	7/8"-7
10" EG	18.00	457.20	14.68	373.00	17.50	444.50	15.25	387.40	12.75	323.9	1.88	47.80	0.06	1.52	1.13	28.70	9.75	248.00	210.9	464.0	31.25	793.80	16	1"-8
12" EG	19.75	501.70	16.40	417.00	20.50	520.70	17.75	450.90	15.00	381.0	2.00	50.80	0.06	1.52	1.25	31.80	13.75	349.25	279.0	614.0	33.75	857.30	16	1 1/8"-8
14" EG	30.00	762.00	17.40	442.00	23.00	584.20	20.25	514.40	16.25	412.8	2.12	53.80	0.06	1.52	1.25	31.80	13.75	349.25	363.0	800.0	34.75	882.70	20	-
16" EG	33.00	838.20	21.29	540.72	25.50	647.70	22.50	571.50	18.50	469.90	2.19	55.63	0.06	1.52	1.38	34.93	9.85	698.50	-	-	46.00	1168.40	20	1 1/4"-8
18" EG	36.00	914.40	21.29	540.84	28.00	711.20	24.75	628.65	21.00	533.40	2.31	58.67	0.06	1.52	1.38	34.93	9.85	698.50	-	-	46.00	1168.40	24	-
20" EG	39.00	990.60	27.43	696.70	30.50	774.70	27.00	685.80	23.00	584.20	2.44	61.98	0.06	1.52	1.38	34.93	9.85	698.50	-	-	57.63	1463.80	24	1 1/4"-8[1]
24" EG	45.00	1143.0	27.43	696.70	36.00	914.40	32.00	812.80	27.25	692.15	2.69	68.33	0.06	1.52	1.63	41.28	9.85	698.50	-	-	57.63	1463.80	24	1 1/2"-8

2-WAY ANSI/ASME CLASS 600 LBS

Flanged Ends
Wrench Operated
Actuators Optional on All Sizes

E = Clearance required for resleeving measured from center line
EG = Enclosed gear operated
N = Number of holes
Two (2) top holes in flanges are tapped with UNC threads. See Hole-UNC column
* Available upon request

SIZE	L		H		D		K		g		b		f		d		Q		Weight		E		N	Hole-UNC
	in	mm	in	mm	in	mm	in	mm	in	mm	in	mm	in	mm	in	mm	in	mm	kg	lbs	in	mm	#	
1/2"	6.50	165.10	3.38	85.70	3.75	95.30	2.62	66.50	1.38	35.10	0.56	14.20	0.25	6.35	0.62	15.70	8.00	203.20	3.6	8.0	6.38	162.10	4	-
3/4"	7.50	190.50	3.38	85.90	4.62	117.30	3.25	82.60	1.69	42.90	0.62	15.70	0.25	6.35	0.75	19.10	8.00	203.20	5.0	11.0	6.38	162.10	4	-
1"	8.50	215.90	4.50	114.30	4.88	124.00	3.50	88.90	2.00	50.80	0.69	17.50	0.25	6.35	0.75	19.10	9.00	228.60	7.3	16.0	8.50	215.90	4	-
1 1/2"	9.50	241.30	5.31	134.90	6.12	155.40	4.50	114.30	2.88	73.20	0.88	22.40	0.25	6.35	0.88	22.40	14.25	362.00	12.3	27.0	10.38	263.70	4	-
2"	11.50	292.10	6.25	158.80	6.50	165.10	5.00	127.00	3.62	91.90	1.00	25.40	0.25	6.35	0.75	19.10	16.50	419.10	18.2	40.0	12.25	311.20	8	-
2 1/2"	13.00	330.20	6.56	166.60	7.50	190.50	5.88	149.40	4.12	104.60	1.12	28.40	0.25	6.35	0.88	22.40	16.50	419.10	38.6	85.0	12.63	320.80	8	-
3"	14.00	355.60	6.56	166.60	8.25	209.60	6.62	168.10	5.00	127.00	1.25	31.80	0.25	6.35	0.88	22.40	16.50	419.10	38.6	85.0	13.63	346.20	8	-
4"	17.00	431.80	7.53	191.10	10.75	273.10	8.50	215.90	6.19	157.20	1.50	38.10	0.25	6.35	1.00	25.40	23.63	600.20	68.2	150.0	16.25	412.80	8	-
4" EG	17.00	431.80	9.10	231.10	10.75	273.10	8.50	215.90	6.19	157.20	1.50	38.10	0.25	6.35	1.00	25.40	7.25	184.20	81.8	180.0	17.63	447.80	8	-
6" EG	22.00	558.80	10.80	274.30	14.00	355.60	11.50	292.10	8.50	215.90	1.88	47.80	0.25	6.35	1.12	28.40	7.25	184.20	152.3	335.0	21.75	552.50	12	-
8" EG	26.00	660.40	12.75	323.90	16.50	419.10	13.75	349.30	10.62	269.70	2.19	55.60	0.25	6.35	1.25	31.80	9.75	247.70	222.7	490.0	26.63	676.40	12	1 1/8"-8
10" EG*	31.00	787.40	14.68	372.90	20.00	508.00	17.00	431.80	12.75	323.90	2.50	63.50	0.25	6.35	1.38	35.10	9.75	247.70	-	-	31.25	793.80	16	1 1/4"-8
12" EG*	33.00	838.20	16.40	416.60	22.00	558.80	19.25	489.00	15.00	381.00	2.62	66.50	0.25	6.35	1.38	35.10	13.75	349.25	-	-	33.75	857.30	20	1 1/4"-8
14" EG*	35.00	889.00	15.66	397.84	23.75	603.25	20.75	527.05	16.25	412.75	2.75	69.85	0.25	6.35	1.50	38.10	13.75	349.25	-	-	34.75	882.70	20	1 3/8"-8
16" EG*	39.00	990.60	21.29	540.72	27.00	685.80	23.75	603.25	18.50	469.90	3.00	76.20	0.25	6.35	1.63	41.28	9.85	250.19	-	-	46.00	1168.40	20	1 1/2"-8
18" EG*	43.00	1092.20	21.29	540.84	29.50	749.30	25.75	654.10	21.00	533.40	3.25	82.60	0.25	6.35	1.75	44.50	9.85	250.19	-	-	46.00	1168.40	20	1 5/8"-8

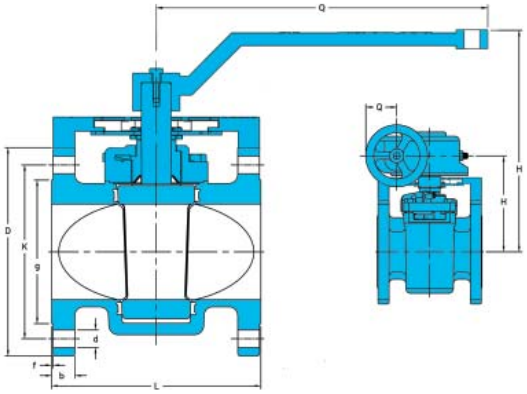

2-WAY DIN PN 16 & PN 40

Flanged Ends
Wrench Operated
Actuators Optional on All Sizes

Dimensions to DIN EN 1092-1 & DIN EN 558-1
Enclosed gear optional on DN 100, and standard on DN 125 and DN 150
E = Clearance required for resleeving measured from center line
N = Number of holes
Two (2) top holes in flanges are tapped with metric threads. See Bolt Size column
*According to DIN EN 1092-2 (Cast Iron Flanges) and DIN prEN 1092-3 (Copper Alloy Flanges), the flanges in this DN and PN nay be supplied with four (4) holes. Where steel flanges are required with four (4) holes, these may be supplied by agreement between manufacturer and purchaser.

SIZE	PN	L	H	D	K	g	b	f	d	Q	Weight	E	N	Bolt Size
		mm	mm	mm	mm	mm	mm	mm	mm	mm	kg	mm	#	
DN 15	16 & 40	130.00	145.00	95.00	65.00	45.00	16.00	2.00	14.00	210.00	-	131.00	4	M12
DN 20	16 & 40	150.00	145.00	105.00	75.00	58.00	18.00	2.00	14.00	210.00	-	131.00	4	M12
DN 25	16 & 40	160.00	145.00	115.00	85.00	68.00	18.00	2.00	14.00	210.00	-	131.00	4	M12
DN 32	16 & 40	180.00	176.00	140.00	100.00	78.00	18.00	2.00	18.00	262.50	-	161.00	4	M16
DN 40	16 & 40	200.00	176.00	150.00	110.00	88.00	18.00	2.00	18.00	262.50	-	161.00	4	M16
DN 50	16	230.00	195.00	165.00	125.00	102.00	18.00	2.00	18.00	419.10	-	189.00	4	M16
	40	230.00	195.00	165.00	125.00	102.00	20.00	2.00	18.00	419.10	-	189.00	4	M16
DN 65	16	290.00	173.00	185.00	145.00	122.00	18.00	2.00	18.00	419.10	-	217.00	8*	M16
	40	290.00	173.00	185.00	145.00	122.00	22.00	2.00	18.00	419.10	-	217.00	8	M16
DN 80	16	310.00	173.00	200.00	160.00	138.00	20.00	2.00	18.00	419.10	-	217.00	8	M16
	40	310.00	173.00	200.00	160.00	138.00	24.00	2.00	18.00	419.10	-	217.00	8	M16
DN 100	16	350.00	200.00	220.00	180.00	158.00	20.00	2.00	18.00	618.00	-	270.00	8	M16
	40	350.00	200.00	235.00	190.00	162.00	24.00	2.00	22.00	618.00	-	270.00	8	M20
DN 125	16	325.00	303.00	250.00	210.00	188.00	22.00	2.00	18.00	184.20	-	370.00	8	M16
	40	325.00	303.00	270.00	220.00	188.00	26.00	2.00	26.00	184.20	-	370.00	8	M24
DN 150	16	350.00	290.00	285.00	240.00	212.00	22.00	2.00	22.00	184.20	-	370.00	8	M20
	40	350.00	290.00	300.00	250.00	218.00	28.00	2.00	26.00	184.20	-	370.00	8	M24

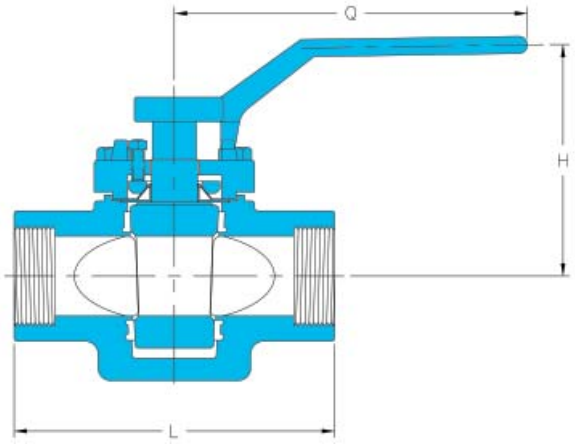

2-WAY ANSI/ASME CLASS 150/300/600 LBS

Screwed Ends
Wrench Operated
Actuators Optional on All Sizes

Dimensions to ANSI B16.11
E = Clearance required for resleeving measured from center line

SIZE	L		H		Q		Weight		E	
	in	mm	in	mm	in	mm	kg	lbs	in	mm
1/2″	3.93	100.00	3.38	85.90	8.00	203.00	2.00	4.4	6.38	162.10
3/4″	3.93	100.00	3.38	85.50	8.00	203.00	2	4.4	6.38	162.10
1″	5.50	140.00	4.50	114.00	9.00	229.00	3	6.6	8.50	215.90
1 1/2″	6.30	160.00	5.31	135.00	14.25	362.00	6	13.2	10.38	263.70
2″	7.87	200.00	6.25	159 .00	16.50	419.00	10	22.0	12.25	311.20
2 1/2″	7.87	200.00	6.56	167.00	16.50	419.00	11	24.0	12.63	320.80

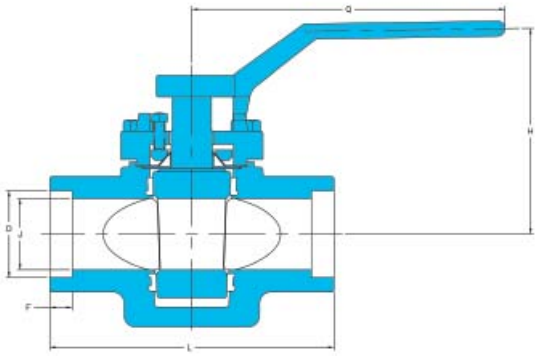

2-WAY ANSI/ASME CLASS 150/300/600 LBS

Socket Weld Ends
Wrench Operated
Actuators Optional on All Sizes

Dimensions to ANSI B16.11
E = Clearance required for resleeving measured from center line

SIZE	L		H		D		J		F		Q		Weight		E	
	in	mm	in	mm	in	mm	in	mm	in	mm	in	mm	kg	lbs	in	mm
1/2″	3.93	100.00	3.38	85.90	0.85	21.70	0.55	14.00	0.37	9.50	8.00	203.00	2	4.4	6.38	162.10
3/4″	3.93	100.00	3.38	85.50	1.07	27.20	0.75	19.00	0.50	12.70	8.00	203.00	2	4.4	6.38	162.10
1″	5.50	140.00	4.50	114.00	1.34	34.00	0.98	25.00	0.50	12.70	9.00	229.00	3	6.6	8.50	215.90
1 1/2″	6.30	160.00	5.31	135.00	1.92	48.80	1.50	38.00	0.50	12.70	14.25	362.00	6	13.2	10.38	263.70
2″	7.87	200.00	6.25	159 .00	2.40	61.00	1.97	50.00	0.66	16.70	16.50	419.00	10	22	12.25	311.20
2 1/2″	7.87	200.00	6.56	167.00	2.91	73.91	2.41	61.21	7.88	200.15	16.50	419.00	11	24.0	12.63	320.80



Full Port ANSI/ASME Class 300 Lbs FluoroSeal® Sleeved Plug Valve

FULL PORT PLUG VALVES

You like the design features of our standard port valves, but are concerned about flow restrictions?

Now, you have the best of two worlds:
FluoroSeal® proven design combined with non-restricted flow.

The new F Series is available in ANSI/ASME Classes 150, 300 and 600 lbs.

Size range from 1" to 10".

Same material offering as our standard valves.

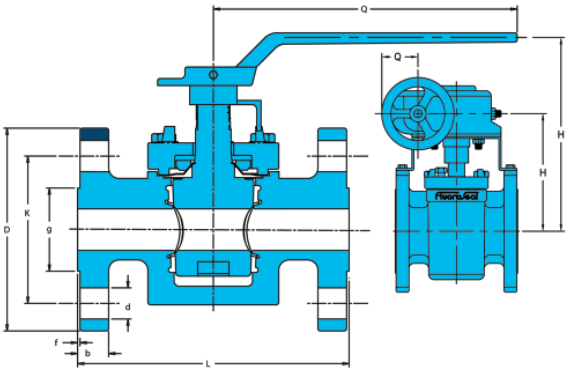

FULL PORT ANSI/ASME CLASS 150 LBS

Flanged Ends
Wrench Operated
Actuators Optional on All Sizes

E = Clearance required for resleeving measured from center line
EG = Enclosed gear operated
N = Number of holes
Two (2) top holes in flanges are tapped with UNC threads. See Hole-UNC column

SIZE	L		H		D		K		g		b		f		d		Q		Weight		E		N	Hole-UNC
	in	mm	in	mm	in	mm	in	mm	in	mm	in	mm	in	mm	in	mm	in	mm	kg	lbs	in	mm	#	
1/2"	4.25	108.00	3.38	85.90	3.50	88.90	2.38	60.50	1.38	35.10	0.37	9.40	0.06	1.52	0.62	15.70	8.00	203.00	2.3	5	6.38	162.10	4	-
3/4"	4.63	117.50	3.38	86.00	3.88	98.50	2.75	69.90	1.68	42.90	0.37	9.50	0.06	1.52	0.63	16.00	8.00	203.00	-	-	6.38	162.10	4	-
1"	6.50	165.10	5.06	128.6	4.88	124.00	3.12	79.20	2.00	50.80	0.69	17.50	0.06	1.52	0.62	15.70	14.25	362.00	-	-	5.75	146.10	4	-
1 1/2"	7.50	190.50	5.81	147.50	6.12	155.40	3.88	98.60	2.88	73.20	0.81	20.60	0.06	1.52	0.62	15.70	16.50	419.00	-	-	6.88	174.80	4	-
2"	8.50	215.90	9.25	235.00	6.50	165.10	4.75	120.7	3.62	91.90	0.88	22.40	0.06	1.52	0.75	19.10	23.63	600.00	-	-	7.20	182.90	4	5/8"-11
3" EG	11.13	282.70	9.25	235.00	8.25	209.60	6.00	152.40	5.00	127.00	1.12	28.40	0.06	1.52	0.75	19.10	23.63	600.00	-	-	7.75	196.90	4	5/8"-11
4" EG	12.00	304.80	11.00	279.40	10.00	254.00	7.50	190.50	6.19	157.20	1.25	31.80	0.06	1.52	0.75	19.10	9.75	248.00	-	-	10.48	266.20	4	5/8"-11
6" EG	22.00	558.80	-	-	12.50	317.50	9.50	241.30	8.50	215.90	1.44	36.60	0.06	1.52	0.88	22.40	-	-	-	-	13.25	336.60	8	-
8" EG	27.00	685.80	17.81	452.50	15.00	381.00	11.75	298.50	10.62	269.70	1.62	41.10	0.06	1.52	0.88	22.40	13.75	349.00	-	-	17.13	435.10	4	3/4"-10
10" EG	13.00	330.20	14.91	378.74	16.00	406.40	14.25	361.95	12.75	323.85	1.12	28.45	0.06	1.52	1.00	25.40	9.85	250.19	-	-	21.13	536.70	12	-

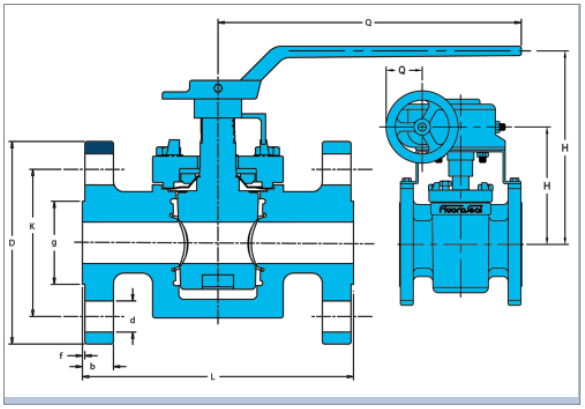

FULL PORT ANSI/ASME CLASS 300 LBS

Flanged Ends
Wrench Operated
Actuators Optional on All Sizes

E = Clearance required for resleeving measured from center line
EG = Enclosed gear operated
N = Number of holes
Two (2) top holes in flanges are tapped with UNC threads. See Hole-UNC column

SIZE	L		H		D		K		g		b		f		d		Q		Weight		E		N	Hole-UNC
	in	mm	in	mm	in	mm	in	mm	in	mm	in	mm	in	mm	in	mm	in	mm	kg	lbs	in	mm	#	
1/2″	5.50	139.70	3.38	85.90	3.75	95.30	2.62	66.50	1.38	35.10	0.56	14.20	0.06	1.52	0.62	15.70	8.00	203.00	3.2	7	6.38	162.10	4	-
3/4″	6.00	152.40	-	-	3.75	95.30	3.25	82.60	1.69	42.90	0.62	15.70	0.06	1.52	0.75	19.10	-	-	-	-	-	-	4	-
1″	6.50	165.10	5.06	128.6	4.88	124.00	3.50	88.90	2.00	50.80	0.69	17.50	0.06	1.52	0.75	19.10	14.25	362.00	-	-	5.75	146.10	4	-
1 1/2″	7.50	190.50	5.81	147.50	6.12	155.40	4.50	114.30	2.88	73.20	0.81	20.60	0.06	1.52	0.88	22.40	16.50	419.00	-	-	6.88	174.80	4	-
2″	8.50	215.90	9.25	235.00	6.50	165.10	5.00	127.00	3.62	91.90	0.88	22.40	0.06	1.52	0.75	19.10	23.63	600.00	-	-	7.20	182.90	8	-
3″ EG	11.13	282.70	9.25	235.00	8.25	209.60	6.62	168.10	5.00	127.00	1.12	28.40	0.06	1.52	0.88	22.40	23.63	600.00	-	-	7.75	196.90	8	-
4″ EG	12.00	304.80	11.00	279.40	10.00	254.00	7.88	200.20	6.19	157.20	1.25	31.80	0.06	1.52	0.88	22.40	9.75	248.00	-	-	10.48	266.20	8	-
6″ EG	22.00	558.80	-	-	12.50	317.50	10.62	269.70	8.50	215.90	1.44	36.60	0.06	1.52	0.88	22.40	-	-	-	-	13.25	336.60	12	-
8″ EG	27.00	685.80	17.81	452.50	15.00	381.00	13.00	330.20	10.62	269.70	1.62	41.10	0.06	1.52	1.00	25.40	13.75	349.00	-	-	17.13	435.10	4	7/8"-9
10″ EG	18.00	457.20	14.91	378.74	17.50	444.50	15.25	387.35	12.75	323.85	1.81	45.97	0.06	1.52	1.13	28.58	9.85	250.19	-	-	21.13	536.70	16	-

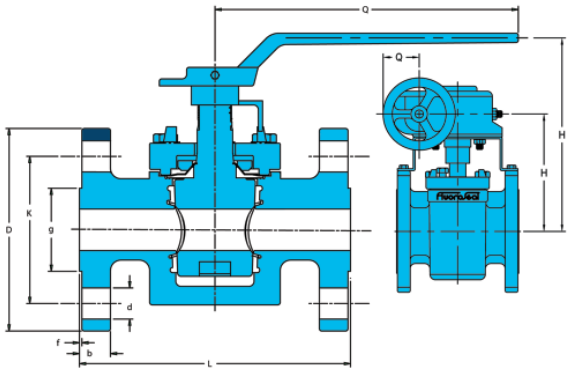

FULL PORT ANSI/ASME CLASS 600 LBS

Flanged Ends
Wrench Operated
Actuators Optional on All Sizes

E = Clearance required for resleeving measured from center line
EG = Enclosed gear operated
N = Number of holes
Two (2) top holes in flanges are tapped with UNC threads. See Hole-UNC column

SIZE	L		H		D		K		g		b		f		d		Q		Weight		E		N	Hole-UNC
	in	mm	in	mm	in	mm	in	mm	in	mm	in	mm	in	mm	in	mm	in	mm	kg	lbs	in	mm	#	
1/2″	5.50	139.70	3.38	85.90	3.75	95.30	2.62	66.50	1.38	35.10	0.56	14.20	0.06	1.52	0.62	15.70	8.00	203.00	-	-	6.38	162.10	4	-
3/4″	6.00	152.40	-	-	3.75	95.30	3.25	82.60	1.69	42.90	0.62	15.70	0.06	1.52	0.75	19.10	-	-	-	-	-	-	4	-
1″	6.50	165.10	5.06	128.6	4.88	124.00	3.50	88.90	2.00	50.80	0.69	17.50	0.06	1.52	0.75	19.10	14.25	362.00	-	-	5.75	146.10	4	-
1 1/2″	7.50	190.50	5.81	147.50	6.12	155.40	4.50	114.30	2.88	73.20	0.81	20.60	0.06	1.52	0.88	22.40	16.50	419.00	-	-	6.88	174.80	4	-
2″	8.50	215.90	9.25	235.00	6.50	165.10	5.00	127.00	3.62	91.90	0.88	22.40	0.06	1.52	0.75	19.10	23.63	600.00	-	-	7.20	182.90	8	-
3″ EG	11.13	282.70	9.25	235.00	8.25	209.60	6.62	168.10	5.00	127.00	1.12	28.40	0.06	1.52	0.88	22.40	23.63	600.00	-	-	7.75	196.90	8	-
4″ EG	12.00	304.80	11.00	279.40	10.00	254.00	8.50	215.90	6.19	157.20	1.25	31.80	0.06	1.52	1.00	25.40	9.75	248.00	-	-	10.48	266.20	8	-
6″ EG	22.00	558.80	-	-	12.50	317.50	11.50	292.10	8.50	215.90	1.44	36.60	0.06	1.52	1.12	28.40	-	-	-	-	13.25	336.60	12	-
8″ EG	27.00	685.80	17.81	452.50	15.00	381.00	13.75	349.30	10.62	269.70	1.62	41.10	0.06	1.52	1.25	31.80	13.75	349.00	-	-	17.13	435.10	12	-
10″ EG	31.00	787.40	14.91	378.74	20.00	508.00	17.00	431.80	12.75	323.85	2.50	63.50	0.25	6.35	1.38	35.10	9.85	250.19	-	-	21.13	536.70	16	-

FluoroSeal Inc.

Specialty Valves

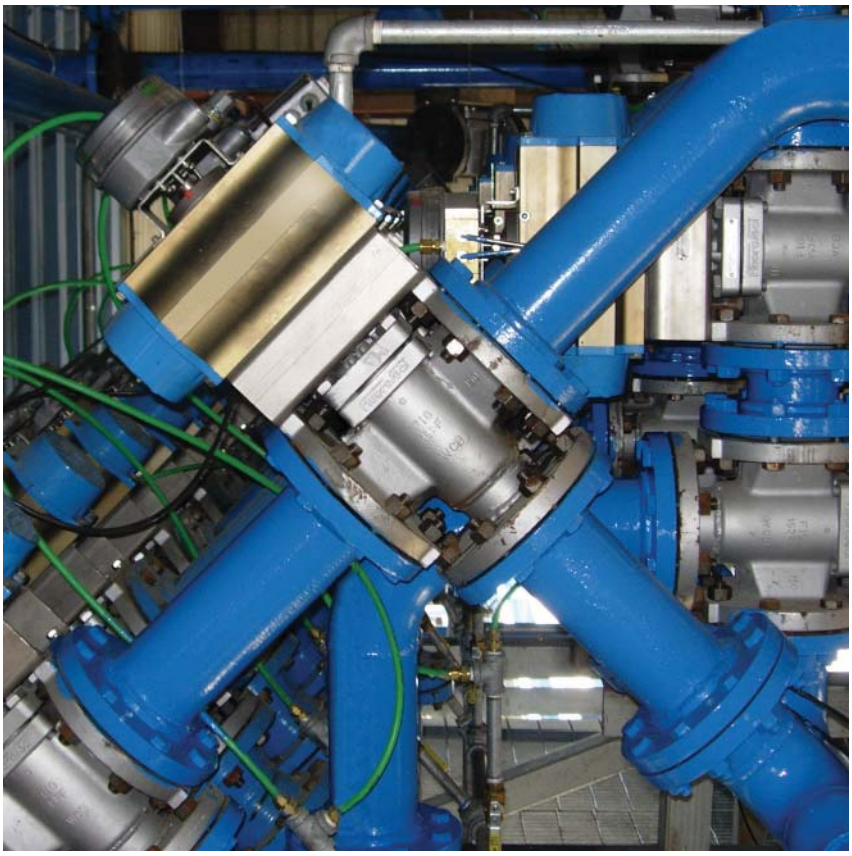

SLEEVED MULTIPORT

FLOW ARRANGEMENTS

Flow is indicated by the arrow(s). When rotating plugs FA2, FA3 or FA4 a transflow condition exists at all times. Only position B in plugs FA1 and FA5 will provide a complete shutoff condition. Valves will be supplied with quarter-turn (90°) operators as standard. Should a half-turn (180°) operator be needed, please specify. ANSI/ASME class 600 lbs available upon request.

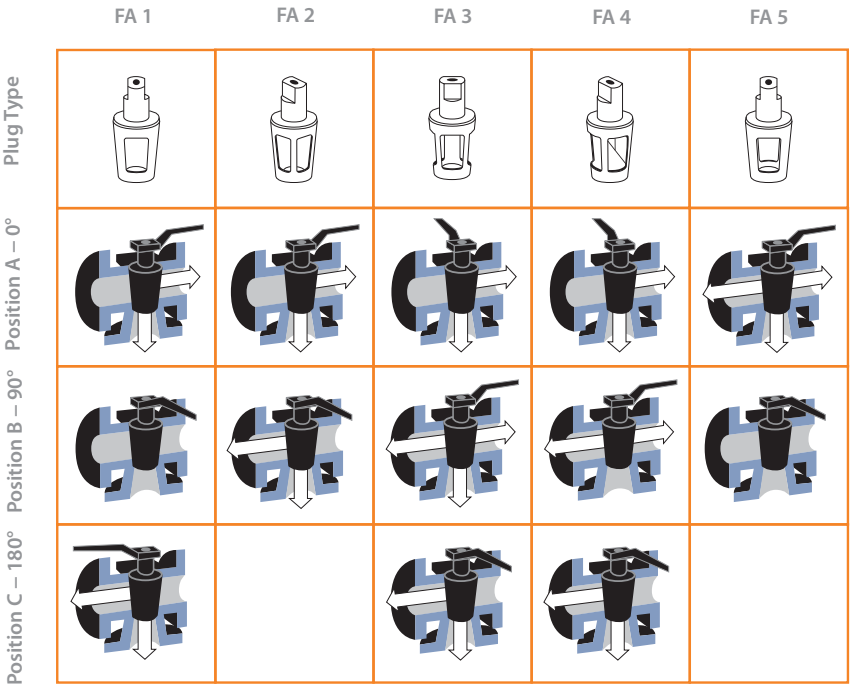

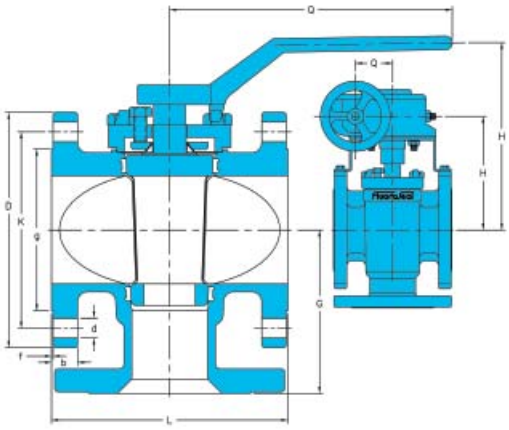

MULTIPORT ASME/ANSI CLASS 150 LBS

Flanged Ends
Wrench Operated
Actuators Optional on All Sizes

Dimensions to ANSI B16.5 & B16.10
E = Clearance required for resleeving measured from center line
EG = Enclosed gear operated
N = Number of holes
Two (2) top holes in flanges are tapped with UNC threads. See Hole-UNC column
* 2 1/2" valves are made from 3" casting, but flanges are machined to 2 1/2" dimensions

SIZE	L		H		D		K		g		b		f		d		Q		G		Weight		E		N	Hole-UNC
	in	mm	in	mm	in	mm	in	mm	in	mm	in	mm	in	mm	in	mm	in	mm	in	mm	kg	lbs	in	mm	#	
1/2"	4.25	108.00	3.38	86.00	3.50	88.90	2.38	60.5	1.38	35.0	0.37	9.50	0.06	1.60	0.63	16.0	8.00	203.00	8.00	203.00	2.5	6	6.38	162.10	4	-
3/4"	4.63	117.50	3.38	86.00	3.88	98.50	2.75	69.9	1.68	42.9	0.37	9.50	0.06	1.60	0.63	16.0	8.00	203.00	8.00	203.00	3.2	7	6.38	162.10	4	-
1"	5.00	127.00	4.50	114.00	4.25	108.00	3.13	79.5	2.00	50.8	0.44	11.20	0.06	1.60	0.63	16.0	9.00	229.00	9.00	229.00	5	11	8.50	215.90	4	-
1 1/2"	6.50	165.10	5.31	135.00	5.00	127.00	3.88	98.6	2.88	73.2	0.56	14.20	0.06	1.60	0.63	16.0	14.25	362.00	14.25	362.00	8.2	18	10.38	263.70	4	-
2"	7.00	177.80	6.25	159.00	6.00	152.40	4.75	120.7	3.63	92.0	0.63	16.00	0.06	1.60	0.75	19.0	16.50	419.00	16.50	419.00	13.6	30	12.25	311.20	4	-
*2 1/2"	8.00	203.20	6.56	167.00	7.50	190.50	5.50	139.7	4.13	104.6	0.75	19.00	0.06	1.60	0.75	19.0	16.50	419.00	16.50	419.00	18.2	40	12.63	320.80	4	-
3"	8.00	203.20	6.56	167.00	7.50	190.50	6.00	152.4	5.00	127.0	0.75	19.00	0.06	1.60	0.75	19.0	16.50	419.00	16.50	419.00	19.1	42	13.63	346.20	4	-
4"	9.00	228.60	7.63	194.00	9.00	228.60	7.50	190.5	6.19	157.2	0.94	23.90	0.06	1.60	0.75	19.0	23.63	600.00	23.63	600.00	32.7	72	16.25	412.80	8	-
4" EG	9.00	228.60	9.10	231.00	9.00	228.60	7.50	190.5	6.19	157.2	0.94	23.90	0.06	1.60	0.75	19.0	7.25	184.00	7.25	184.00	41.4	91	17.63	447.80	8	-
6" EG	10.50	266.70	10.80	274.00	11.00	279.40	9.50	241.3	8.50	215.9	1.00	25.40	0.06	1.60	0.88	22.4	7.25	184.00	7.25	184.00	70.8	148	21.75	552.50	8	-
8" EG	11.50	292.10	12.75	324.00	13.50	342.90	11.75	298.5	10.63	269.8	1.13	28.70	0.06	1.60	0.88	22.4	9.75	248.00	9.75	248.00	117.5	259	26.63	676.40	8	3/4"-10
10" EG	13.00	330.20	14.68	373.00	16.00	406.40	14.25	362.0	12.75	323.9	1.19	30.20	0.06	1.60	1.00	25.4	9.75	248.00	9.75	248.00	181.9	401	31.25	793.80	12	7/8"-9
12" EG	14.00	355.60	16.40	417.00	19.00	482.60	17.00	431.8	15.00	381.0	1.25	31.80	0.06	1.60	1.00	25.4	13.75	349.25	10.00	254.00	-	-	33.75	857.30	12	7/8"-9
14" EG	15.00	381.00	17.40	442.00	21.00	533.40	18.75	476.3	16.25	412.8	1.38	35.10	0.06	1.60	1.12	28.4	13.75	349.25	10.00	254.00	-	-	34.75	882.70	12	1"-8

MULTIPORT ASME/ANSI CLASS 300 LBS

Flanged Ends
Wrench Operated
Actuators Optional on All Sizes

Dimensions to ANSI B16.5 & B16.10
E = Clearance required for resleeving measured from center line
EG = Enclosed gear operated
N = Number of holes
Two (2) top holes in flanges are tapped with UNC threads. See Hole-UNC column
* 2 1/2" valves are made from 3" casting, but flanges are machined to 2 1/2" dimensions

SIZE	L		H		D		K		g		b		f		d		Q		G		Weight		E		N	Hole-UNC
	in	mm	in	mm	in	mm	in	mm	in	mm	in	mm	in	mm	in	mm	in	mm	in	mm	kg	lbs	in	mm	#	
1/2"	5.50	139.70	3.38	86.00	3.75	95.30	2.63	66.80	1.38	35.0	0.56	14.20	0.06	1.6	0.63	16.0	8.00	203.00	2.88	73.20	3.2	7.0	6.38	162.10	4	-
3/4"	6.00	152.40	3.38	86.00	4.63	117.60	3.25	82.60	1.69	42.7	0.63	16.00	0.06	1.6	0.75	19.00	8.00	203.00	3.00	76.20	4.1	9.0	6.38	162.10	4	-
1"	6.50	165.10	4.50	114.00	4.88	124.00	3.50	88.90	2.00	50.8	0.69	17.50	0.06	1.6	0.75	19.00	9.00	229.00	3.75	95.30	5.5	12.0	8.50	215.90	4	-
1 1/2"	7.50	190.50	5.31	135.00	6.13	155.70	4.50	114.30	2.88	73.2	0.81	20.60	0.06	1.6	0.88	22.40	14.25	362.00	4.38	111.30	9.5	21.0	10.38	263.70	4	-
2"	8.50	215.90	6.25	159.00	6.50	165.10	5.00	127.00	3.63	92.0	0.88	22.40	0.06	1.6	0.75	19.00	16.50	419.00	4.75	120.70	13.2	29.0	12.25	311.20	8	-
*2 1/2"	11.13	282.70	6.56	167.00	8.25	209.6	5.88	149.40	4.13	104.6	1.13	28.70	0.06	1.6	0.88	22.40	16.50	419.00	5.56	141.20	21.8	48.0	12.63	320.80	8	-
3"	11.13	282.70	6.56	167.00	8.25	209.6	6.63	168.40	5.00	127.0	1.13	28.70	0.06	1.6	0.88	22.40	16.50	419.00	5.56	141.20	21.8	48.0	13.63	346.20	8	-
4"	12.00	304.80	7.63	194.00	10.00	254.00	7.88	200.20	6.19	157.2	1.25	31.80	0.06	1.6	0.88	22.40	23.63	600.00	6.75	171.50	42.0	92.0	16.25	412.80	8	-
4" EG	12.00	304.80	9.10	231.00	10.00	254.00	7.88	200.20	6.19	157.2	1.25	31.80	0.06	1.6	0.88	22.40	7.25	184.00	6.75	171.50	54.0	119.0	17.63	447.80	8	-
6" EG	15.88	403.40	10.80	274.00	12.50	317.50	10.63	270.00	8.50	215.9	1.44	36.6	0.06	1.6	0.88	22.40	7.25	184.00	8.50	215.90	91.4	201.0	21.75	552.50	12	-
8" EG	16.50	419.10	12.75	324.00	15.00	381.00	13.00	330.20	10.63	269.8	1.63	41.40	0.06	1.6	1.00	25.40	9.75	248.00	10.00	254.00	141.4	311.0	26.63	676.40	12	7/8"-7
10" EG	18.00	457.20	14.68	373.00	17.50	444.50	15.25	387.40	12.75	323.9	1.88	47.80	0.06	1.6	1.13	28.70	9.75	248.00	-	-	210.9	464.0	31.25	793.80	16	1"-8
12" EG	19.75	501.70	16.40	417.00	20.50	520.70	17.75	450.90	15.00	381.0	2.00	50.80	0.06	1.6	1.25	31.80	13.75	349.25	-	-	279.0	614.0	33.75	857.30	16	1 1/8"-7
14" EG	30.00	762.00	17.40	442.00	23.00	584.20	20.25	514.40	16.25	412.8	2.12	53.80	0.06	1.6	1.25	31.80	13.75	349.25	-	-	363.0	800.0	34.75	882.70	20	-

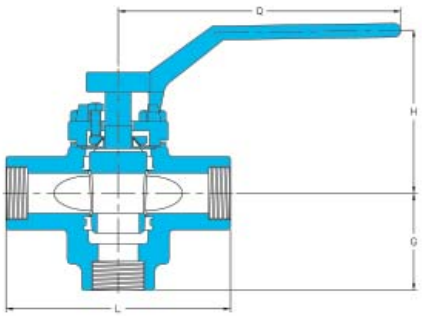

MULTIPORT ASME/ANSI CLASS 150/300/600 LBS

Screwed Ends
Wrench Operated
Actuators Optional on All Sizes

Dimensions to ANSI B16.11
E = Clearance required for resleeving measured from center line

SIZE	L		H		G		Q		Weight		E	
	in	mm	in	mm	in	mm	in	mm	kg	lbs	in	mm
1/2"	3.93	100.00	3.38	85.90	1.69	42.90	8.00	203.00	2.1	4.7	6.38	162.10
3/4"	3.93	100.00	3.38	85.50	1.80	45.70	8.00	203.00	2.1	4.7	6.38	162.10
1"	5.50	140.00	4.50	114.00	2.38	60.50	9.00	229.00	3.2	7.1	8.50	215.90
1 1/2"	6.30	160.00	5.31	135.00	2.88	73.20	14.25	362.00	6.4	14.2	10.38	263.70
2"	7.87	200.00	6.25	159 .00	3.38	85.90	16.50	419.00	10.4	23.0	12.25	311.20

MULTIPORT ASME/ANSI CLASS 150/300/600 LBS

Socket Weld Ends
Wrench Operated
Actuators Optional on All Sizes

Dimensions to ANSI B16.11
E = Clearance required for resleeving measured from center line

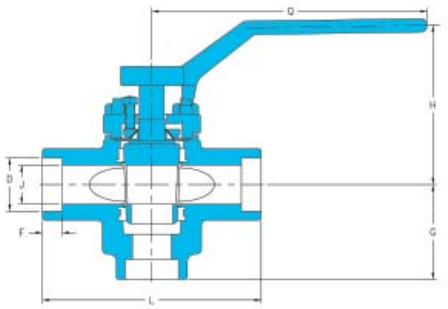

SIZE	L		H		D		J		F		G		Q		Weight		E	
	in	mm	in	mm	in	mm	in	mm	in	mm	in	mm	in	mm	kg	lbs	in	mm
1/2"	3.93	100.00	3.38	85.90	0.85	21.70	0.55	14.00	0.37	9.50	1.69	42.90	8.00	203.00	2.1	4.7	6.38	162.10
3/4"	3.93	100.00	3.38	85.50	1.07	27.20	0.75	19.00	0.50	12.70	1.80	45.70	8.00	203.00	2.1	4.7	6.38	162.10
1"	5.50	140.00	4.50	114.00	1.34	34.00	0.98	25.00	0.50	12.70	2.38	60.50	9.00	229.00	3.2	7.1	8.50	215.90
1 1/2"	6.30	160.00	5.31	135.00	1.92	48.80	1.50	38.00	0.50	12.70	2.88	73.20	14.25	362.00	6.4	14.2	10.38	263.70
2"	7.87	200.00	6.25	159 .00	2.40	61.00	1.97	50.00	0.66	16.70	3.38	85.90	16.50	419.00	10.4	23.0	12.25	311.20

MULTIPORT DIN PN 16 & PN 40

Flanged Ends
Wrench Operated
Actuators Optional on All Sizes

Dimensions to DIN EN 1092-1 & DIN EN 558-1
Enclosed gear optional on DN 100, and standard on DN 125 and DN 150
E = Clearance required for resleeving measured from center line
N = Number of holes
Two (2) top holes in flanges are tapped with metric threads. See Bolt Size column
*According to DIN EN 1092-2 (Cast Iron Flanges) and DIN prEN 1092-3 (Copper Alloy Flanges), the flanges in this DN and PN nay be supplied with four (4) holes. Where steel flanges are required with four (4) holes, these may be supplied by agreement between manufacturer and purchaser.

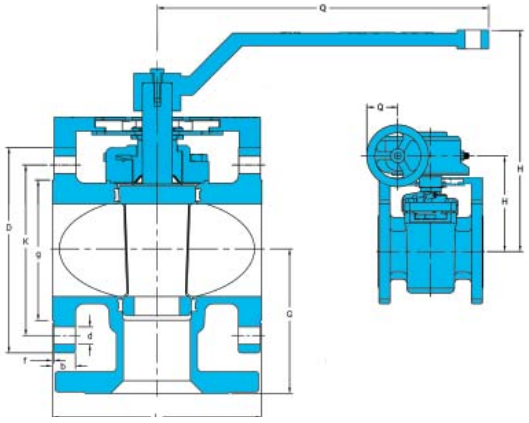

SIZE	PN	L	H	D	K	g	b	f	d	Q	G	Weight	E	N	Bolt Size
		mm	mm	mm	mm	mm	mm	mm	mm	mm	mm	kg	mm	#	
DN 15	16 & 40	130.00	145.00	95.00	65.00	45.00	16.00	2.00	14.00	210.00	65.00	-	131.00	4	M12
DN 20	16 & 40	150.00	145.00	105.00	75.00	58.00	18.00	2.00	14.00	210.00	75.00	-	131.00	4	M12
DN 25	16 & 40	160.00	145.00	115.00	85.00	68.00	18.00	2.00	14.00	210.00	80.00	-	131.00	4	M12
DN 32	16 & 40	180.00	176.00	140.00	100.00	78.00	18.00	2.00	18.00	262.50	90.00	-	161.00	4	M16
DN 40	16 & 40	200.00	176.00	150.00	110.00	88.00	18.00	2.00	18.00	262.50	100.00	-	161.00	4	M16
DN 50	16	230.00	195.00	165.00	125.00	102.00	18.00	2.00	18.00	419.10	115.00	-	189.00	4	M16
	40	230.00	195.00	165.00	125.00	102.00	20.00	2.00	18.00	419.10	115.00	-	189.00	4	M16
DN 65	16	290.00	173.00	185.00	145.00	122.00	18.00	2.00	18.00	419.10	145.00	-	217.00	8*	M16
	40	290.00	173.00	185.00	145.00	122.00	22.00	2.00	18.00	419.10	145.00	-	217.00	8	M16
DN 80	16	310.00	173.00	200.00	160.00	138.00	20.00	2.00	18.00	419.10	155.00	-	217.00	8	M16
	40	310.00	173.00	200.00	160.00	138.00	24.00	2.00	18.00	419.10	155.00	-	217.00	8	M16
DN 100	16	350.00	200.00	220.00	180.00	158.00	20.00	2.00	18.00	618.00	175.00	-	270.00	8	M16
	40	350.00	200.00	235.00	190.00	162.00	24.00	2.00	22.00	618.00	175.00	-	270.00	8	M20
DN 125	16	325.00	303.00	250.00	210.00	188.00	22.00	2.00	18.00	184.20	163.00	-	370.00	8	M16
	40	325.00	303.00	270.00	220.00	188.00	26.00	2.00	26.00	184.20	163.00	-	370.00	8	M24
DN 150	16	350.00	290.00	285.00	240.00	212.00	22.00	2.00	22.00	184.20	175.00	-	370.00	8	M20
	40	350.00	290.00	300.00	250.00	218.00	28.00	2.00	26.00	184.20	175.00	-	370.00	8	M24

FluoroSeal Inc.

Specialty Valves



SEVERE SERVICE (FE)

SEVERE SERVICE (FE) PLUG VALVES

FluoroSeal Inc. has developed the Severe Service (FE) Sleeved Plug Valve for tight emission control in more demanding applications. This valve is intended for applications in processes involving thermal cycling or a high number of mechanical operations. This compact but robust package is based on the standard FluoroSeal® Sleeved Plug Valve design combined with other proven seal technologies.

Extensive field experience has demonstrated this valves' ability to perform in a variety of severe applications. FluoroSeal® Severe Service (FE) Valves have one of the best fugitive emissions test results on the market, as demonstrated by independent lab testing.

Please ask your local Representative for a full fugitive emission test report.

DIN valves are available upon request.



ANSI/ASME Severe Service (FE) FluoroSeal® Plug Valve

Standard lockout capability and solid position stop.

Primary shaft seal extrusion is controlled with reinforced PTFE end rings, secondary shaft seal utilizes tight gap metallic shaft for full metal containment.

PTFE sleeve provides in-line and primary external seals. Performance is enhanced with full encapsulation at port opening and precise body ribs to focus sealing forces on plug.

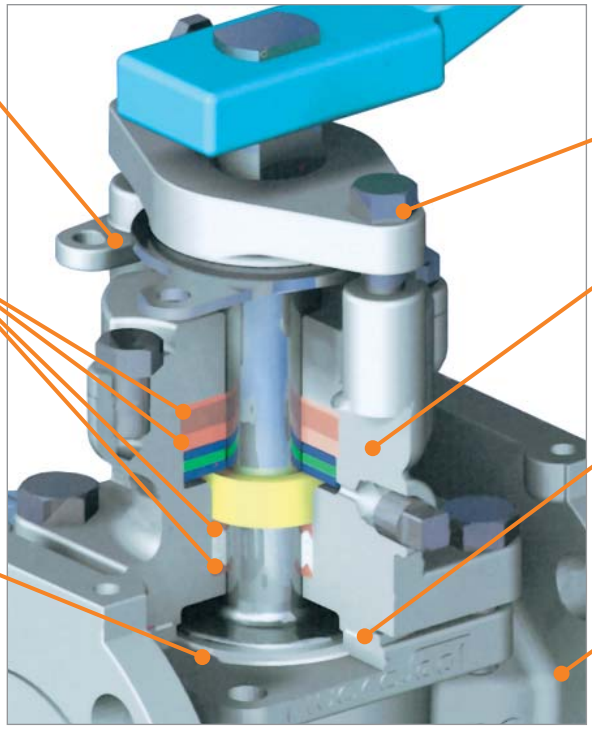

In-line seal adjustable independent of shaft seal.

Innovative shaft seal provides self-adjusting, redundant and independent packing available in all PTFE or PTFE and flexible graphite combinations. Configured for optional monitoring or injection port.

Bonnet is double sealed with fully contained independent PTFE and flexible graphite seal backing up the primary seal at the sleeve.

Precision (investment) cast body provides tight dimensional control to assure concentricity between plug and body. This minimizes induced side loads to the primary seals and shaft seals during operation.

PLUG-ANSI-DIN-R001-2008

1 888 269 0220 (Canada & U.S.A.)

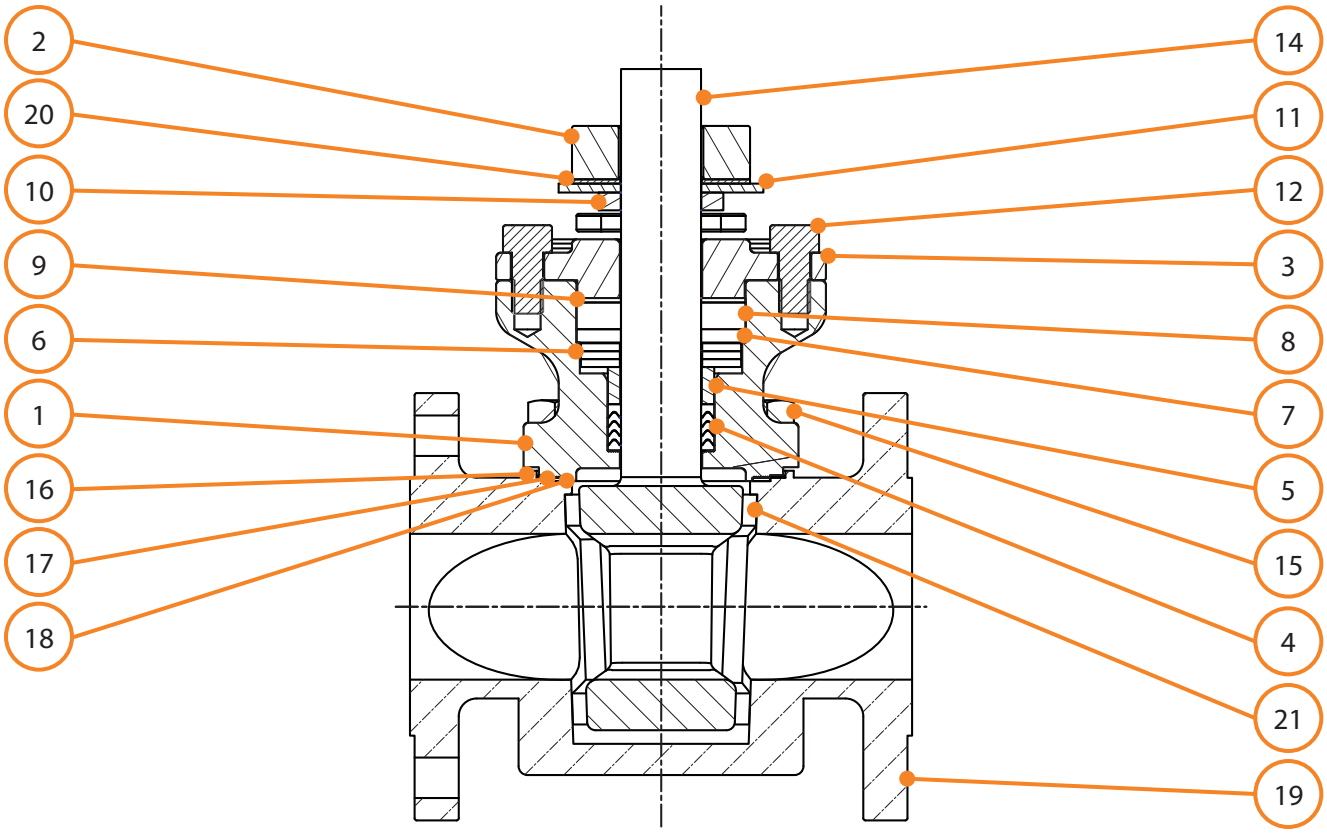

MATERIALS OF CONSTRUCTION

Item	Quantity		
1	1	Bonnet	Customer Specified
2	1	Plug Adjuster	CD4MCu
3	1	Packing Gland	CD4MCu
4	1	Packing Set	Carbon Filled PTFE & Virgin PTFE
5	1	Follower	Customer Specified
6	3	Belleville Washer	INCONEL®
7	1	Seal Washer	NITRONIC 60®
8	1	Top Packing	Flexible Graphite or PTFE
9	1	Seal Retainer	NITRONIC 60®
10	1	Shaft Adapter	304 Stainless Steel
11	1	Stop	304 Stainless Steel
12	2	Packing Bolt	304 Stainless Steel
13	2	Plug Bolt	304 Stainless Steel
14	1	Plug	Customer Specified
15	4	Bonnet Bolt	Customer Specified
16	1	Body Seal Retainer	Customer Specified
17	1	Body Seal	Flexible Graphite
18	1	Body Seal	Virgin PTFE
19	1	Body	Customer Specified
20	1	Thrust Washer	Carbon RPTFE
21	1	Sleeve	Virgin PTFE
22	1	Handle	Carbon Steel
23	1	Handle Bolt	Carbon Steel
24	1	Pipe Plug	316 Stainless Steel

This product is engineered for each application and is available in many alloys as well as custom configurations.

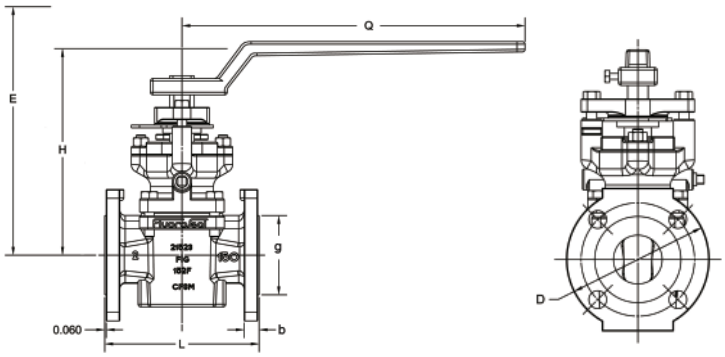

SEVERE SERVICE (FE) ANSI/ASME CLASS 150 / 300 / 600 LBS

E = Clearance required for resleeving measured from center line
Larger dimensions available on request

SIZE	H		E		
	in	mm	in	mm	
1/2″	8.09	205.49	7.80	198.12	For all other dimensions see 2-Way ANSI/ASME Class 150 / 300 / 600 Lbs on page BA2 – BA3
3/4″	8.09	206.49	7.80	198.12	
1″	8.50	215.90	9.94	252.48	
2″	10.25	260.35	12.75	323.85	
3″	10.50	266.70	14.38	365.25	
4″	12.50	317.50	17.62	447.55	
4" EG	13.75	349.25	17.62	447.55	
6″ EG	20.25	514.35	23.75	603.25	
8″ EG	23.25	590.55	31.00	787.40	
10″ EG	24.81	630.17	35.00	889.00	
12" EG	23.25	590.55	-	-	

FluoroSeal Inc.

Specialty Valves



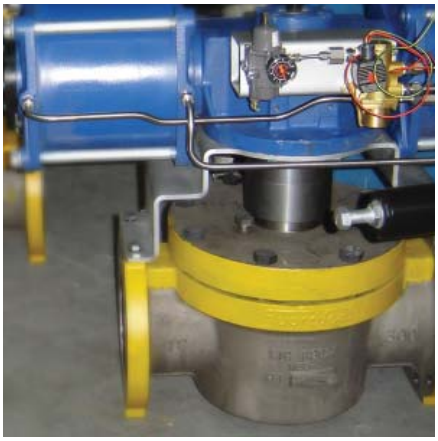





SPECIAL SERVICE

SPECIAL SERVICE FLUOROSEAL® PLUG VALVES

Whether you are looking for a valve to suit a specific application, or want to customize a standard FluoroSeal® Plug Valve, you have come to the right place. Our special service valves provide you with both an array of turn-key solutions and the ability to fully match your application needs.

CAGED CONTROL PLUG VALVES

The Caged Control Valve is ideal for abrasive applications with high solids concentrations and is commonly used in both throttling and on/off applications. Caged valves have been used successfully in many critical applications in the Mining, Pulp & Paper, and Chemical Processing industries.

The design of the Caged Control Valve provides maximum protection to the polymer sealing surfaces in the plug valves. The key to the caged design is that the PTFE sleeve in the valve is never directly exposed to the process flow. This allows the sleeve to maintain its sealing integrity in abrasive applications.

The design of the Caged Control Valve allows the plug to rotate freely around a fixed cage within the body. The cage is stationary in the body while the plug rotates, thus allowing the sealing area of the plug to be in direct contact with the sleeve to provide bubble-tight shutoff. The cage stays in position protecting the polymer sleeve from erosion/abrasion while the plug is in any intermediate position such as when the valve is moving from the open to the closed position or when the valve is throttling.

The cage has upper and lower graphite filled RTFE bearings that prevent galling between the plug and cage. A keyway keeps the cage from rotating in the body. This allows free movement of the plug around the cage.

The Caged Control Valve still allows for in-line adjustment for through valve leakage just as a standard plug valve does since the plug and the cage are independent of each other.

The cage and plug in the Caged Control Valve are generally made from CD4MCu material, an abrasion resistant alloy with the corrosion resistance of 316 SS. Caged Control Valves are available in any material, from carbon steel and stainless steel to any of the more exotic alloys.





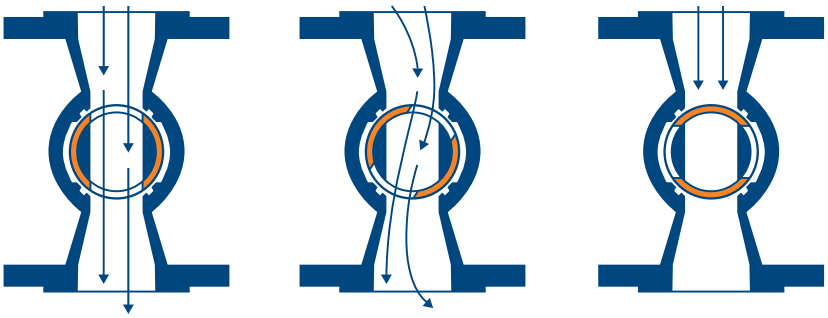

From Left to Right: Full Flow (Plug 0°), Control Flow (Plug Throttling), Shutoff (Plug 90°)

PLUG-ANSI-DIN-R001-2008

1 888 269 0220 (Canada & U.S.A.)

UREA SERVICE — A CAGED CONTROL SHOWCASE

An excellent example of the efficiency designed into a Cage Control Valve is its use in urea service. In combination with a side flush option as demonstrated in Double Block and Bleed Valves, the FluoroSeal® Cage Control Plug Valve can withstand frequent pressure drops and urea crystallization present in the fabrication of this chemical reactant.

Inherently corrosive and erosive, urea service requires a valve designed to protect its main seals from the attack of the urea flow and possible particulates. Not only does the Caged Control Valve achieve this, it also effectively prevents the valve from clogging and sticking.

SPECIAL CLEANING PLUG VALVES

FluoroSeal® Special Cleaning Plug Valves can be prepared for a variety of demanding service applications, such as hydrogen, isocyanate, oxygen, phosgene and chlorine.

In the case of chlorine, FluoroSeal® Chlorine Service Valves are provided with a vented plug to relieve pressure to the upstream side. This modification results in a uni-directional valve which is indicated on the valve whith a flow direction arrow.

FluoroSeal® Sleeved Plug Valves are manufactured in accordance with the recommendations of the Chlorine Institute Pamphlet 6 and provide superior performance on this demanding application. All FluoroSeal® Chlorine Valves are made from thoroughly cleaned and dried components under controlled conditions and this control is maintained throughout parts preparation, assembly, testing and special protective packaging.





Chlorine Service Packaging Caution Tags

DOUBLE BLOCK & BLEED AND SAMPLING PLUG VALVES

Because of the double port seals in both directions and the sealed isolation of the chamber below the plug and the areas around the plug, 90° to the port openings, a drainage connection into the plug cavity may be drilled and tapped through the body from either side or the bottom.

A 1/2" (12.7 mm) drain connection is standard, but other sizes can also be provided. Specify connection size; length as indicated on the drawing and whether the bleed valve is required. A FluoroSeal® Fig. R152/302SE is ideally suited as the bleed valve.



ANSI/ASME FluoroSeal® Double Block and Bleed Plug Valve with Gear

ANSI/ASME

Bleed valve diameter 1/2" available in block valve size 2", 2 1/2", 3", 4"
Bleed valve diameter 3/4" available in block valve size 6", 8"
Bleed valve diameter 1" available in block valve size 10", 12", 14", 16", 18", 24"

DIN

Bleed valve diameter DN 15 available in block valve size DN 50, DN 65, DN 80, DN 100
Bleed valve diameter DN 20 available in block valve size DN 150

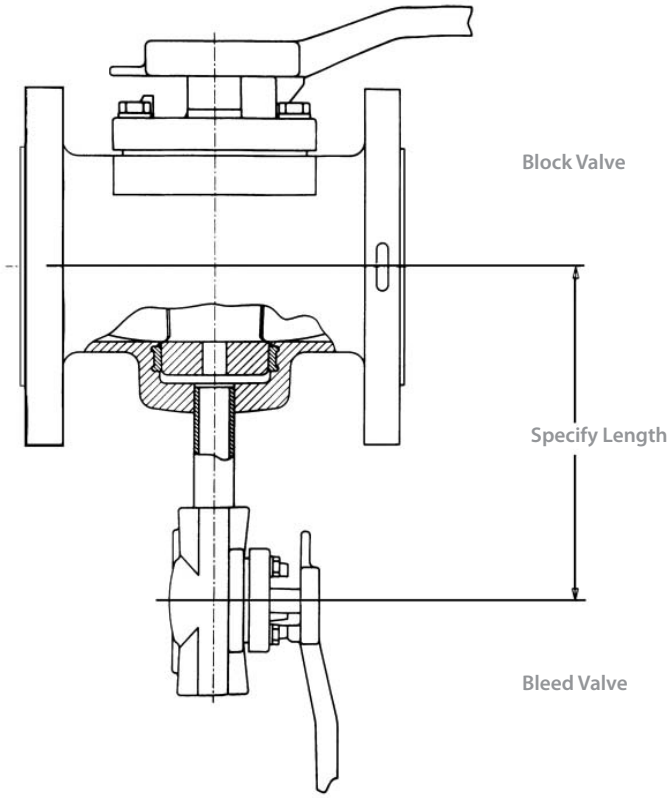

FIRE SAFE SLEEVED PLUG VALVES



FluoroSeal® Sleeved Plug Valves with the Fire Safe top seal have been tested and certified by an independent laboratory to the requirements of API 607, Fifth Edition (ISO 10497-5) for external leakage.

The FluoroSeal® Fire Seal design utilizes a PTFE sleeve and PTFE diaphragm as the external sealing components under normal conditions. Should these components be destroyed by fire, external leakage is prevented by:

1. A secondary flexible graphite seal ring encapsulated and compressed between the metal diaphragm and the machined counterbore in the valve body

2. A flexible graphite delta ring encapsulated and compressed between the unique shaped metal diaphragm and the machined plug stem

FluoroSeal® Fire Safe Valves also utilize a vented plug designed to relieve pressure buildup resulting from expansion of the service media within the plug, due to elevated temperatures caused by fire. The pressure is relieved to the upstream side, providing a preferred flow direction indicated by an arrow on the valve cover.

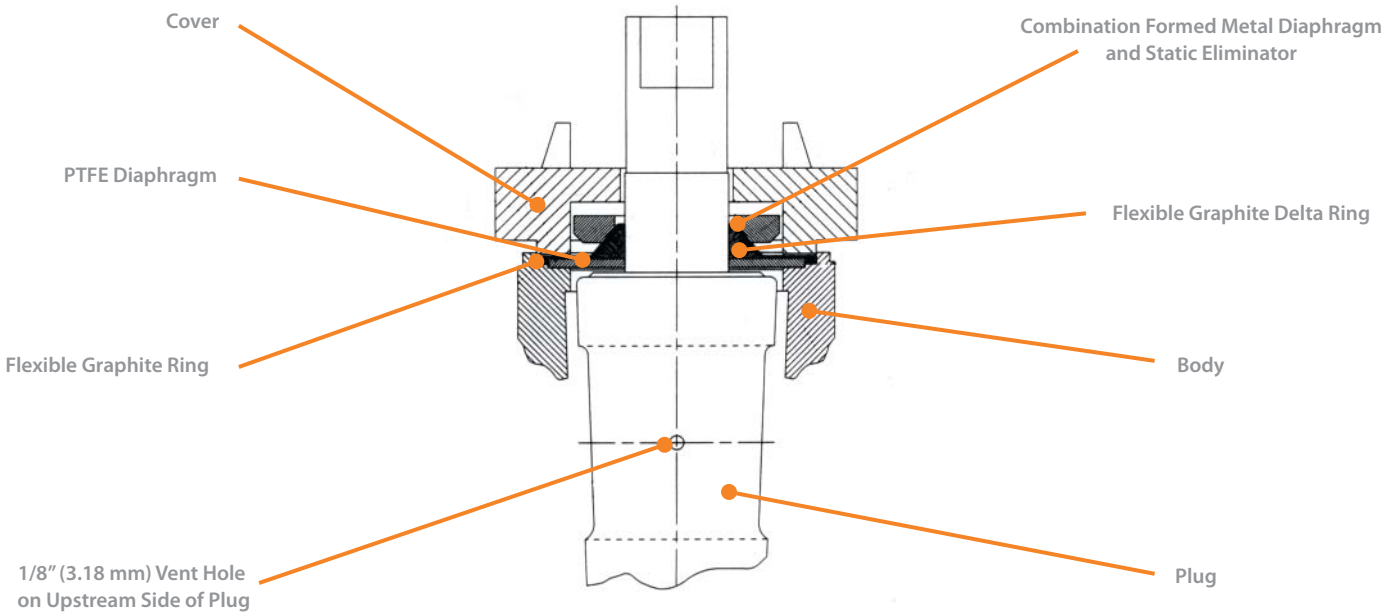

Fire Safe Assembly

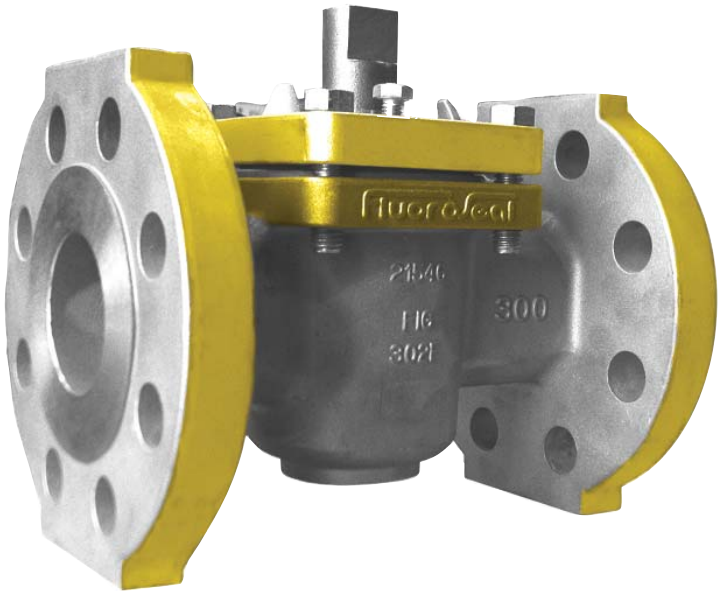

ANSIéASME Class 300 Lbs FluoroSeal® HF Alkylation Plug Valve

HF ALKYLATION PLUG VALVES

FluoroSeal® HF Alkylation Valves are designed and manufactured in strict compliance with the requirements of the major HF Alkylation's Process Licensors specifications. Due to the severity of the process, all testing procedures are strictly adhered to per Licensor's requirements.

UOP APPROVED

FluoroSeal Inc.'s commitment to high quality requires each valve body to be subjected to a hydrostatic shell test at 1.5 times the ANSI rating at 100°F (38°C), as defined in ASME B16.34 (DIN EN 12266-1). In addition, every valve body casting is tested with helium gas at 300 psig for 100% assurance of no through-wall leakage. We also conduct a full X-Ray test on the bodies to ensure that they meet FluoroSeal Inc.'s casting requirements per ASTM E446 (DIN EN 444 and DIN EN 462).

APPLICATIONS

Blending	Crude Desalting	Gas Plants
Isometration	Light Ends	Sulfur Plants

MATERIALS OF CONSTRUCTION

	ANSI/ASME	DIN
Body	ASTM A494 Gr. M35-1	2.4365
Plug	ASTM A494 Gr. M35-1	2.4365
Cover	ASTM A494 Gr. M35-1	2.4365
Cover Bolts	ASTM A193 Gr. B7M	
Adjusting Bolts	ASTM A193 Gr. B7M	
Thrust Washer	ASTM A494 Gr. M35-1	2.4365
Metal Diaphragm	MONEL® 400	MONEL® 400
Delta Ring	Flexible Graphite	Flexible Graphite
Cover Seal Ring	Flexible Graphite	Flexible Graphite
Diaphragm	PTFE Fluorocarbon	PTFE Fluorocarbon
Sleeve	PTFE Fluorocarbon	PTFE Fluorocarbon
Paint	Special for Leak Detection	Special for Leak Detection

FluoroSeal Inc.

Specialty Valves

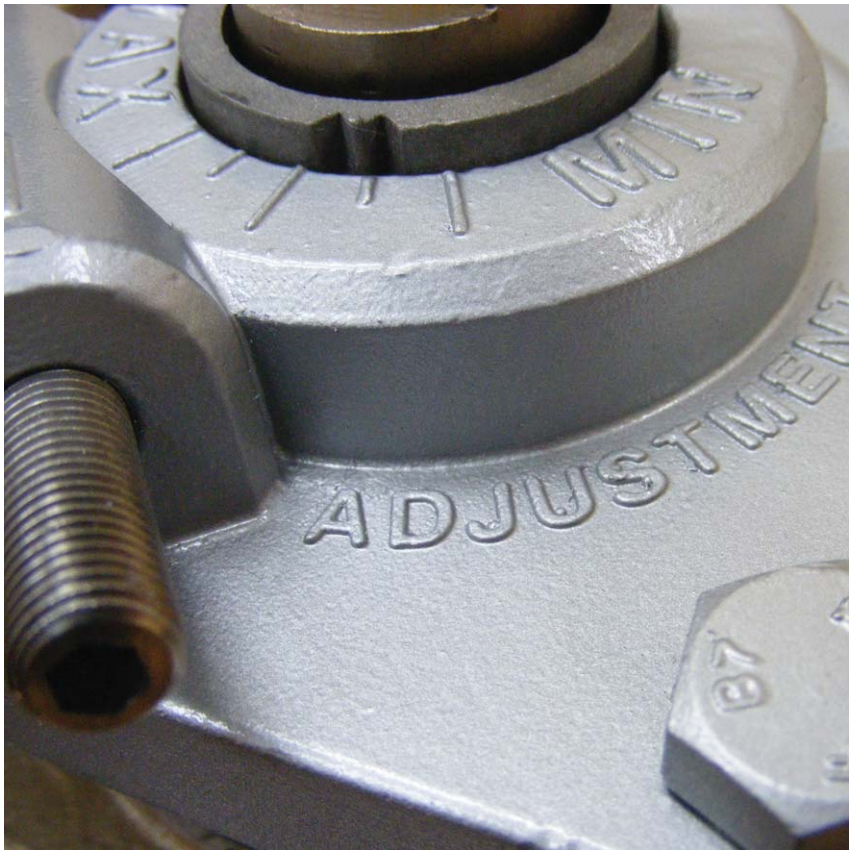

LINED VALVES

PRECISION CAST BODY, PLUG AND COVER

FluoroSeal® Lined Plug Valves use investment casting method for the major pressure holding components.

- All casting components traceable to mill test certificates
- Investment cast on all materials for sizes 1/2" – 10" (ANSI/ASME Class 150 lbs)
- Investment cast on all materials for sizes 1/2" – 6" (ANSI/ASME Class 300 lbs)
- Investment cast on all materials for sizes DN 15 – DN 150 (PN 16 – PN 40)

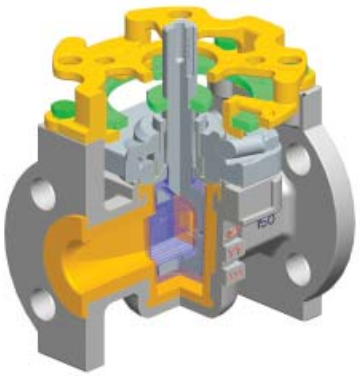

Lined Valve Section View

CORROSION PROTECTION

FluoroSeal® standard base model offers Carbon Steel body, plug and cover (ASTM A216 Gr. WCB, 1.0619). Even though FluoroSeal Inc. offers the low porosity PFA (Perfluoroalkoxy) as standard, all cast parts have an epoxy-based coating prior to lining for added protection from corrosion attack due to permeation.

LOCKED-IN LINER

Lined Plug Valves feature a virgin, unpigmented PFA lining applied by Transfer Molding and locked into castings by machined dove tail shaped grooves, and cast dovetail-shaped recesses in body castings and cast holes. This helps prevent liner collapse in vacuum conditions and blow out in high pressure conditions in conjunction with high temperatures.

The Transfer Molding method ensures equal distribution and consistency of liner throughout the entire surface of the lined components. FluoroSeal® Lined Plug Valves comply with the industry specifications (ASTM F1545) dictating the liners' uniform thickness across the entire valve and guarantee the absence of any weak section in the valve liner. Absence of pigmentation in the PFA renders all defects visible and testifies to FluoroSeal Inc.'s commitment of quality first. The use of virgin PFA reduces stress in the lining which could be caused by the use of regrind in its composition.



Lined Plug Cutaway

CAVITY-FREE DESIGN

By design, Plug Valves are cavity-free both in open and closed positions. This prevents the accumulation of particles between the plug and body and makes the valve ideal for corrosive slurry applications.

LARGE SEALING AREA

The interface between the tapered outer plug and the tapered inner body liner provides a 360° sealing area. This results in a tight shutoff. The seal is created due to compression between the plug and body, thus the valve is bi-directional and seals on both upstream and downstream sides simultaneously.



Dovetail Liner Section

IN-LINE ADJUSTMENT

FluoroSeal® Lined Plug Valves feature the state-of-the-art EZ-SEAL® (patent pending) adjustment mechanism, available on sizes 1/2" to 6" (DN 15 to DN 150). No special tooling is needed to adjust an EZ-SEAL®, and the latter allows effective maintenance planning and extended service life through simple visual diagnostic. As the valve is being adjusted throughout its operational span, the Min / Max gauge integrated into the EZ-SEAL® cover indicates its remaining service life. Regular visual readings of this gauge can assist plant managers and maintenance crews in scheduling of repairs and eventual line shut-downs before the wear on the valve reaches a critical point. The EZ-SEAL® system also includes an ISO bracket which enables direct mounting of actuation in a wide range of ISO patterns.

QUADRUPLE ATMOSPHERIC SEAL

Single point external adjusting bolt (patent pending) in the EZ-SEAL® cover ensures equilibrium to the compression of the stem and in-line seals by imparting a balanced force through a metal thrust cam inserted in the cover above the formed metal diaphragm. This system provides a definitive advantage over other adjustment methods available on the market by eliminating all side loading and related wear-and-tear on the liner.

The primary seal of the plug valve is between the plug and body liner. The additional sealing levels are an integrated delta ring and PTFE diaphragm completely encapsulated by a metal diaphragm. The delta ring and PTFE diaphragm have a double role of plug and stem seal. The specially formed metal diaphragm assists in encapsulation, acts as an antistatic device, and is a metal seal to atmosphere, in case of PTFE failure. The combined mechanism provides an excellent, quadruple seal to atmosphere and a bi-directional in-line seal adjustment.

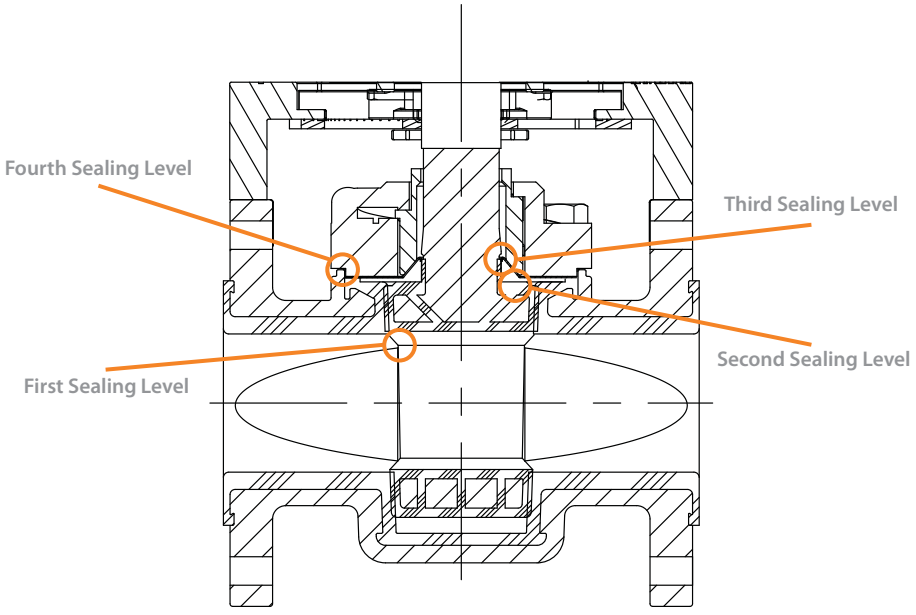

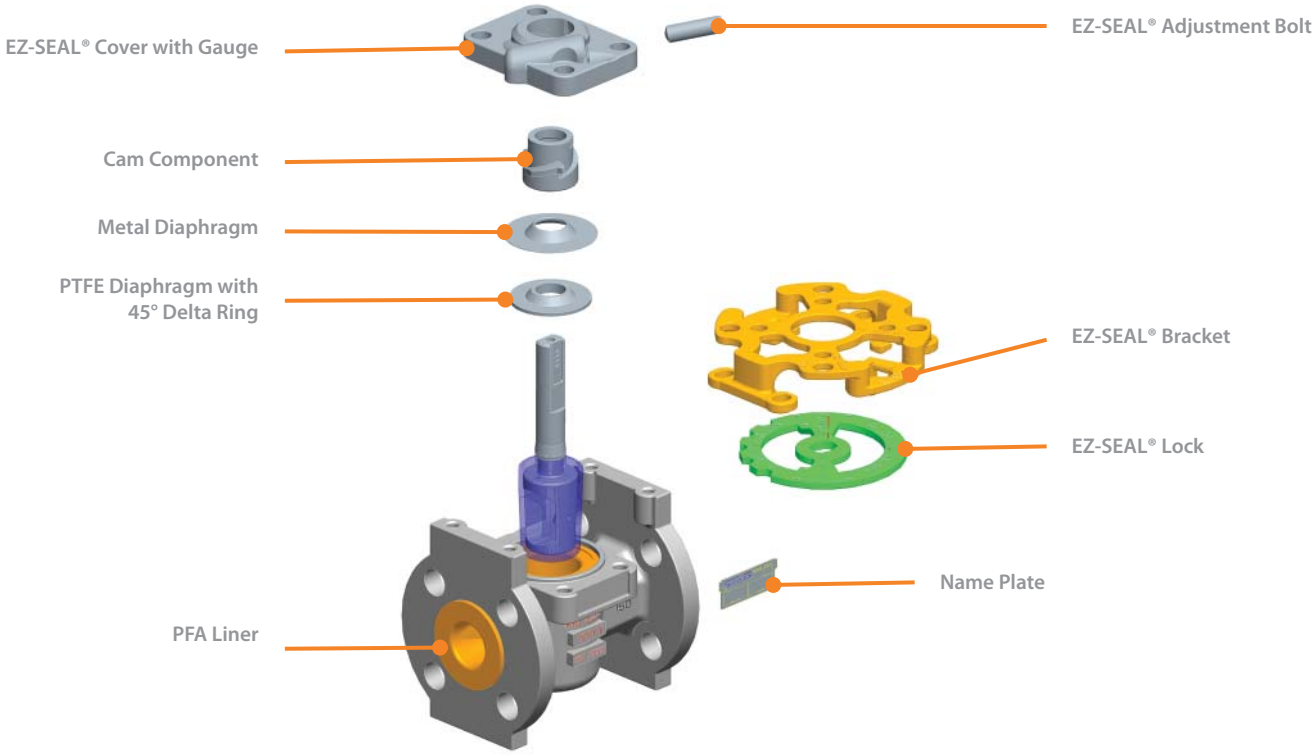

Lined Valve Exploded View

LINED ANSI/ASME CLASS 150 LBS

Flanged Ends
Wrench Operated
Actuators Optional on All Sizes

Dimensions to ANSI B16.5 & B16.10
EG = Enclosed gear operated
N = Number of holes
Two (2) top holes in flanges are tapped with UNC threads. See Hole-UNC column
* Available upon request

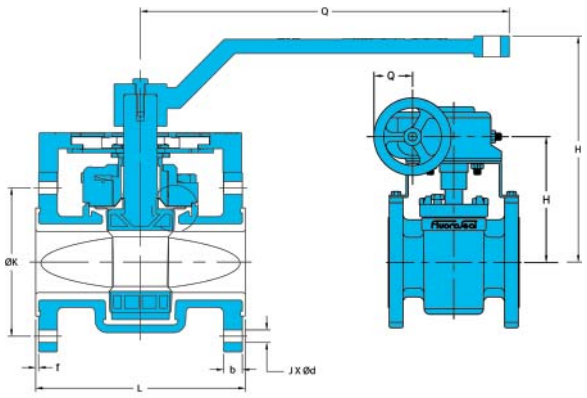

SIZE & PRODUCT DESCRIPTION	L		H		D		K		g		b		f		d		Q		N	Hole-UNC
	in	mm	in	mm	in	mm	in	mm	in	mm	in	mm	in	mm	in	mm	in	mm	#	
1" LR152F/W-WCB/PFA	5.00	127.00	5.57	141.48	4.25	108.00	3.13	79.50	2.00	50.80	0.49	12.45	0.098	2.50	0.63	16.00	8.27	210.00	4	-
1 1/2" LR152F/W-WCB/PFA	6.50	165.10	6.80	172.72	5.00	127.00	3.88	98.60	2.88	73.20	0.59	14.99	0.098	2.50	0.63	16.00	10.33	262.40	4	-
2" LR152F/W-WCB/PFA	7.00	177.80	7.54	191.52	6.00	152.40	4.75	120.70	3.63	92.00	0.63	16.00	0.098	2.50	0.75	19.00	12.40	315.00	4	-
3" LR152F/W-WCB/PFA	8.00	203.20	8.10	205.74	7.50	190.50	6.00	152.40	5.00	127.00	0.79	20.07	0.098	2.50	0.75	19.00	12.40	315.00	4	-
4" LR152F/W-WCB/PFA	9.00	228.60	9.56	242.82	9.00	228.60	7.50	190.50	6.19	157.20	0.94	23.90	0.098	2.50	0.75	19.00	24.30	617.20	8	-
4" LR152F/EG-WCB/PFA	9.00	228.60	11.80	299.72	9.00	228.60	7.50	190.50	6.19	157.20	0.94	23.90	0.098	2.50	0.75	19.00	7.25	184.00	8	-
6" LR152F/EG-WCB/PFA	10.50	266.70	14.00	355.60	11.00	279.40	9.50	241.30	8.50	215.90	1.00	25.40	0.098	2.50	0.88	22.40	7.25	184.00	8	-
8" LR152F/EG-WCB/PFA*	11.50	292.10	13.00	330.20	13.50	342.90	11.75	298.50	10.63	269.80	1.13	28.70	0.098	2.50	0.88	22.40	9.75	248.00	8	3/4"-10
10" LR152F/EG-WCB/PFA*	13.00	330.20	14.94	379.48	16.00	406.40	14.25	362.00	12.75	323.90	1.19	30.20	0.098	2.50	1.00	25.40	9.75	248.00	12	7/8"-9
12" LR152F/EG-WCB/PFA*	14.00	355.60	15.69	398.53	19.00	482.60	17.00	431.80	15.00	381.00	1.25	31.80	0.098	2.50	1.00	25.40	13.75	349.25	12	7/8"-9
14" LR152F/EG-WCB/PFA*	15.00	381.00	-	-	21.00	533.40	18.75	476.30	16.25	412.80	1.38	35.10	0.098	2.50	1.12	28.40	-	-	12	1"-8

FluoroSeal Inc.

Specialty Valves



OPTIONS

EZ-SEAL® TOP SEAL & ADJUSTMENT SYSTEM

This product is available on FluoroSeal® Sleeved and Lined Plug Valves in ANSI/ ASME and DIN standards. In fact all DIN valves up to DN 150 come fitted with the EZ-SEAL® (patent pending) as standard.

FluoroSeal®, non-lubricated, EZ-SEAL® (patent pending) Sleeved and Lined Plug Valves possess the state–of–the–art in PTFE fluorocarbon seat designs. With low maintenance and trouble-free operation, a high integrity bubble-tight seal is provided both in-line and to atmosphere. The specific design features contributing to the superiority of this product are described as a function of their individual purpose and engineering precautions taken to assure maximum service life.

This innovation places FluoroSeal® Plug Valves at the leading edge of technology in the industrial valve market .

The EZ-SEAL® offers 360° simultaneous and even compression adjustment of the packing and plug, eliminating side loading. Visual indication takes the guess work out of valve adjustment and remaining service life diagnostic.



Valve with EZ-SEAL® (Patent Pending) Assembly

THE EZ-SEAL® CONCEPT

An easily accessible, single point frontal adjustment system that introduces the ease and precision of maintenance planning and cost savings on both manual and automated valve applications. Achievement is two-fold:

1. Maintenance technicians now have a trouble-free way of resealing both manual and automated valves with a single, quick and easy adjustment point (in comparison to time-consuming, cumbersome multiple adjustment bolt designs)
2. Visual gauging offers upfront knowledge of valve status, useful in scheduling valve change-out on shutdowns



EZ-SEAL® (Patent Pending) Cover with Cast On Min / Max Gauge



EZ-SEAL® (Patent Pending)
Bracket and Lock

ADVANTAGES

- No special tooling needed
- Signifcantly reduces recordable leakages
- Visual diagnostic
- Extended service life
- Allows for easy maintenance planning
- EZ-SEAL® Bracket and EZ-SEAL® Lock with a wide range of ISO mount patterns and five locking positions are offered in 304 SS as standard
- Allows direct mounting of actuation without inhibiting visual verification of stem status

DESIGN FEATURES SUMMARY

1. Single point frontal adjustment system
2. 360° simultaneous and even compression of top seal and plug
3. Plug adjustment is linear, impossible to side load
4. Tapered stem for increased sealing capabilities
5. Visual Min / Max cam adjustment indicator
6. Combination formed metal diaphragm and static eliminator
7. ISO mount stem
8. All-in-one ISO bracket and locking device, as standard
9. All components are high precision investment cast
10. Explosion-proof stem design
11. Positive shutoff



ANSI/ASME Class 300 Lbs FluoroSeal® Sleeved Plug Valve with EZ-SEAL®
(Patent Pending) Cover

JACKETED PLUG VALVES

The bolt-on Fully Jacketed Plug Valve with standard flanges eliminates the need to oversize piping flanges, translating in tremendous savings to the user.

Among other features, the ease of installation allows any FluoroSeal® Plug Valve to be retrofitted in-line in process.

FluoroSeal® Plug Valves are also available with Partial Steam Jackets. Choose accordingly to the application requirements.

There's no limits to the possibilities: all FluoroSeal® valves in all trim materials are available in either a two-way or multiport versions, with partial or full jackets.

DIN Fully Jacketed Plug Valves are available upon request.



Fig. 1 Standard Welded Full Jacket with Oversized Flanges



Fig. 3 Full Bottom Jacket Using Valve Body Standard Flanges (Jacket Pressure Rating Available in 150 & 300 lbs)



Fig. 2 Partial Welded Jacket



Fig. 4 Multiport with Full Welded Jacket

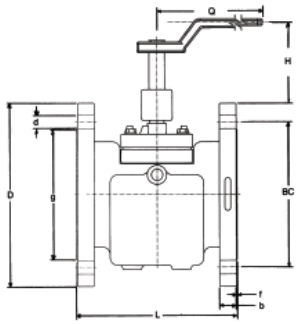

Wrench Operated

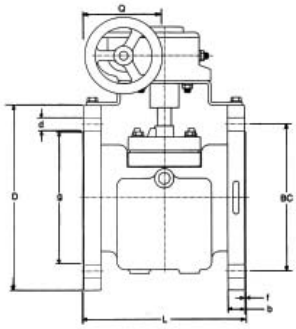

Enclosed Gear Operated

FULLY JACKETED ANSI/ASME CLASS 150 LBS

E = Clearance required for resleeving measured from center line
EG = Enclosed gear operated
N = Number of holes

SIZE	L		H		D		K		g		b		f		d		Q		E		N
	in	mm	in	mm	in	mm	in	mm	in	mm	in	mm	in	mm	in	mm	in	mm	in	mm	#
2" x 1" x 2"	7.00	177.80	7.00	177.80	6.00	152.40	4.75	120.70	3.63	92.00	0.63	16.00	0.06	1.60	0.75	19.00	9.00	228.60	8.50	215.90	4
2 1/2" x 1 1/2" x 2 1/2"	8.00	203.20	7.63	193.70	7.50	190.50	5.50	139.70	4.13	104.60	0.75	19.00	0.06	1.60	0.75	19.00	14.25	362.00	10.38	263.70	4
3" x 2" x 3"	8.00	203.20	8.00	203.20	7.50	190.50	6.00	152.40	5.00	127.00	0.75	19.00	0.06	1.60	0.75	19.00	16.50	419.10	12.25	311.20	4
4" x 3" x 4"	9.00	228.60	9.00	228.60	9.00	228.60	7.50	190.50	6.19	157.20	0.94	23.90	0.06	1.60	0.75	19.00	16.50	419.10	13.63	346.20	8
6" x 4" x 6"	10.50	266.70	10.00	254.00	11.00	279.40	9.50	241.30	8.50	215.90	1.00	25.40	0.06	1.60	0.88	22.40	23.63	600.20	16.25	412.80	8
6" x 4" x 6" EG	10.50	266.70	11.50	292.10	11.00	279.40	9.50	241.30	8.50	215.90	1.00	25.40	0.06	1.60	0.88	22.40	14.50	368.30	17.63	447.80	8
8" x 6" x 8" EG	11.50	292.10	12.00	304.80	13.50	342.90	11.75	298.45	10.62	269.75	1.13	28.70	0.06	1.60	0.88	22.40	14.50	368.30	21.75	552.50	8
10" x 8" x 10" EG	13.00	330.20	14.25	361.95	16.00	406.40	14.25	361.95	12.75	323.85	1.19	30.20	0.06	1.60	1.00	25.40	19.50	495.30	26.63	676.40	12
12" x 10" x 12" EG	14.00	355.60	15.75	400.05	19.00	482.60	17.00	431.80	15.00	381.00	1.25	31.80	0.06	1.60	1.00	25.40	19.50	495.30	31.25	793.80	12
14" x 12" x 14" EG	15.00	381.00	14.19	360.43	21.00	533.40	18.75	476.30	16.25	412.80	1.38	35.10	0.06	1.60	1.12	28.45	27.50	698.50	33.75	857.30	12
16" x 12" x 16" EG	16.00	406.40	16.31	414.27	23.00	584.20	21.25	539.75	18.50	469.90	1.38	35.10	0.06	1.60	1.13	28.58	27.50	698.50	33.75	857.30	16
18" x 16" x 18" EG	34.00	863.60	-	-	25.00	635.00	22.75	577.85	21.00	533.40	1.50	38.10	0.06	1.60	1.25	31.75	27.50	698.50	46.00	1168.40	16
20" x 18" x 20" EG	36.00	914.40	21.88	555.75	27.00	685.80	25.00	635.00	23.00	584.20	1.62	41.15	0.06	1.60	1.25	31.75	27.50	698.50	46.00	1168.40	20

FULLY JACKETED ANSI/ASME CLASS 300 LBS

E = Clearance required for resleeving from center line
EG = Enclosed gear operated
N = Number of holes

SIZE	L		H		D		K		g		b		f		d		Q		E		N
	in	mm	in	mm	in	mm	in	mm	in	mm	in	mm	in	mm	in	mm	in	mm	in	mm	#
2" x 1" x 2"	8.50	215.90	5.00	127.00	6.50	165.10	5.00	127.00	3.63	92.00	0.88	22.40	0.06	1.60	0.75	19.00	9.00	228.60	8.50	215.90	8
2 1/2" x 1 1/2" x 2 1/2"	11.13	282.70	5.31	135.00	8.25	209.60	5.88	149.40	4.13	104.60	1.13	28.70	0.06	1.60	0.88	22.40	14.25	362.00	10.38	263.70	8
3" x 2" x 3"	11.13	282.70	5.31	135.00	8.25	209.60	6.63	168.40	5.00	127.00	1.13	28.70	0.06	1.60	0.88	22.40	16.50	419.10	12.25	311.20	8
4" x 3" x 4"	12.00	304.80	6.10	155.00	10.00	254.00	7.88	200.20	6.19	157.20	1.25	31.80	0.06	1.60	0.88	22.40	16.50	419.10	13.63	346.20	8
6" x 4" x 6"	15.88	403.40	11.50	292.10	12.50	317.50	10.63	270.00	8.50	215.90	1.44	36.60	0.06	1.60	0.88	22.40	23.63	600.20	16.25	412.80	12
6" x 4" x 6" EG	15.88	403.40	11.50	292.10	12.50	317.50	10.63	270.00	8.50	215.90	1.44	36.60	0.06	1.60	0.88	22.40	14.50	368.30	17.63	447.80	12
8" x 6" x 8" EG	16.50	419.10	12.00	304.80	15.00	381.00	13.00	330.20	10.62	269.75	1.63	41.40	0.06	1.60	1.00	25.40	14.50	368.30	21.75	552.50	12
10" x 8" x 10" EG	18.00	457.20	14.25	361.95	17.50	444.50	15.25	387.35	12.75	323.85	1.88	47.80	0.06	1.60	1.12	28.45	19.50	495.30	26.63	676.40	16
12" x 10" x 12" EG	19.75	501.65	15.75	400.05	20.50	520.70	17.75	450.85	15.00	381.00	2.00	50.80	0.06	1.60	1.25	31.75	19.50	495.30	31.25	793.80	16
16" x 12" x 16" EG	24.00	609.60	16.31	414.27	25.50	647.70	22.50	571.50	18.50	469.90	2.19	55.63	0.06	1.60	1.38	35.05	27.50	698.50	33.75	857.30	20
18" x 16" x 18" EG	26.00	660.40	-	-	28.00	711.20	24.75	628.65	21.00	533.40	2.31	58.67	0.06	1.60	1.38	35.05	27.50	698.50	46.00	1168.40	24
20" x 18" x 20" EG	28.00	711.20	-	-	30.50	774.70	27.00	685.80	23.00	584.20	2.44	61.98	0.06	1.60	1.38	35.05	27.50	698.50	46.00	1168.40	24

FULLY JACKETED ANSI/ASME CLASS 600 LBS

E = Clearance required for resleeving from center line
EG = Enclosed gear operated
N = Number of holes

SIZE	L		H		D		K		g		b		f		d		Q		E		N
	in	mm	in	mm	in	mm	in	mm	in	mm	in	mm	in	mm	in	mm	in	mm	in	mm	#
2" x 1" x 2"	11.50	292.10	-	-	6.50	165.10	5.00	127.00	3.62	91.90	1.00	25.40	0.25	6.35	0.75	19.10	9.00	228.60	8.50	215.90	8
2 1/2" x 1 1/2" x 2 1/2"	13.00	330.20	-	-	7.50	190.50	5.88	149.40	4.12	104.60	1.12	28.40	0.25	6.35	0.88	22.40	14.25	362.00	10.38	263.70	8
3" x 2" x 3"	14.00	355.60	-	-	8.25	209.60	6.62	168.10	5.00	127.00	1.25	31.80	0.25	6.35	0.88	22.40	16.50	419.10	12.25	311.20	8
4" x 3" x 4"	17.00	431.80	-	-	10.75	273.10	8.50	215.90	6.19	157.20	1.50	38.10	0.25	6.35	1.00	25.40	16.50	419.10	13.63	346.20	8
6" x 4" x 6"	22.00	558.80	-	-	14.00	355.60	11.50	292.10	8.50	215.90	1.88	47.80	0.25	6.35	1.12	28.40	23.63	600.20	16.25	412.80	12
6" x 4" x 6" EG	22.00	558.80	-	-	14.00	355.60	11.50	292.10	8.50	215.90	1.88	47.80	0.25	6.35	1.12	28.40	14.50	368.30	17.63	447.80	12
8" x 6" x 8" EG	26.00	660.40	-	-	16.50	419.10	13.75	349.30	10.62	269.70	2.19	55.60	0.25	6.35	1.25	31.80	14.50	368.30	21.75	552.50	12
10" x 8" x 10" EG	31.00	787.40	-	-	20.00	508.00	17.00	431.80	12.75	323.90	2.50	63.50	0.25	6.35	1.38	35.10	19.50	495.30	26.63	676.40	16
12" x 10" x 12" EG	33.00	838.20	-	-	22.00	558.80	19.25	489.00	15.00	381.00	2.62	66.50	0.25	6.35	1.38	35.10	19.50	495.30	31.25	793.80	20
16" x 12" x 16" EG	39.00	990.60	-	-	27.00	685.80	23.75	603.25	18.50	469.90	3.00	76.20	0.25	6.35	1.63	41.28	27.50	698.50	33.75	857.30	20
18" x 16" x 18" EG	43.00	1092.20	-	-	29.50	749.30	25.75	654.10	21.00	533.40	3.25	82.60	0.25	6.35	1.75	44.50	27.50	698.50	46.00	1168.40	20
20" x 18" x 20" EG	47.00	1193.80	-	-	32.00	812.80	28.50	723.90	23.00	584.20	3.50	88.90	0.25	6.35	1.75	44.50	27.50	698.50	46.00	1168.40	24

PARTIALLY JACKETED PLUG VALVES

Heat dissipation due to the partial insulating effect of the PTFE sleeve, combined with the basic plug valve design, provides a more uniform heat flange-to-flange with a partial jacket than with a full jacket. Therefore, a partial jacket should be selected for most applications.

Refer to standard valves for dimensional data. Available in sizes 1" to 18".

DIN Partially Jacketed Plug Valves are available upon request.

PARTIALLY JACKETED 2-WAY ANSI/ASME CLASS 150, 300 & 600 LBS

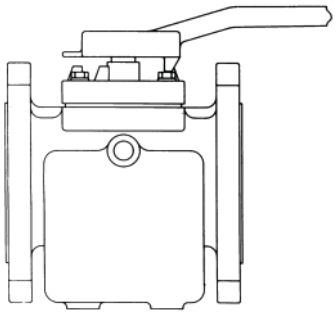

1" to 4"
Wrench Operated

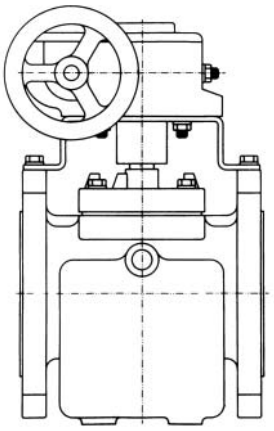

4" to 18"
Enclosed Gear Operated

PARTIALLY JACKETED MULTIPORT ANSI/ASME CLASS 150, 300 & 600 LBS

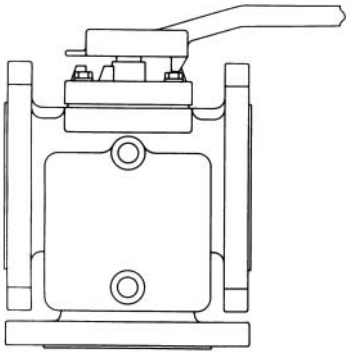

1" to 4"
Wrench Operated

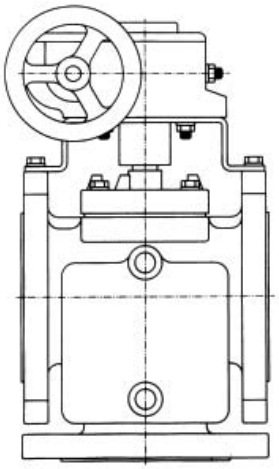

4" to 18"
Enclosed Gear Operated

JACKET INLET OUTLET AND DRAIN CONNECTIONS

VALVE SIZE	1"		1 1/2"		2"		3"		4"		6"		8"		10"		12"		16"		18"	
	in	mm	in	mm	in	mm	in	mm	in	mm	in	mm	in	mm	in	mm	in	mm	in	mm	in	mm
NPT	3/8	9.53	1/2	12.70	1/2	12.70	1/2	12.70	1/2	12.70	1	25.40	1	25.40	1	25.40	1	25.40	1"	25.40	1 1/2	38.10

V-PORT & CHARACTERIZED PLUGS

FluoroSeal® Plug Valves are also available with Characterized Plugs for fine control applications. Standard V-Ports in 60° and other custom configurations are available in all trim materials.

The design and features of the FluoroSeal® Plug Valve makes it an excellent choice for fine throttling in slurry and chemical applications. The no cavity design allows the plug valve to throttle without exposing the stem seal to line pressure, a definite advantage over most ball valves specifically in high cycling applications.

The Cage Control V-Port Plug Valve is mostly used in highly abrasive applications offering the benefits of a metal seated control valve, with the added advantage of a bubble-tight shutoff at a fraction of the cost. This product is available in all materials from 1" to 14" (DN 25 to DN 150).

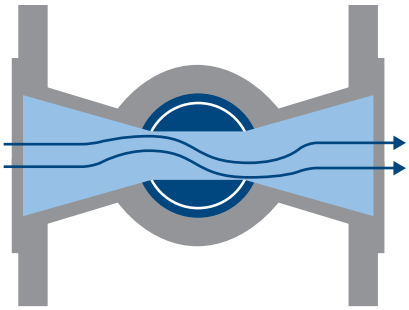

Flow Diagram

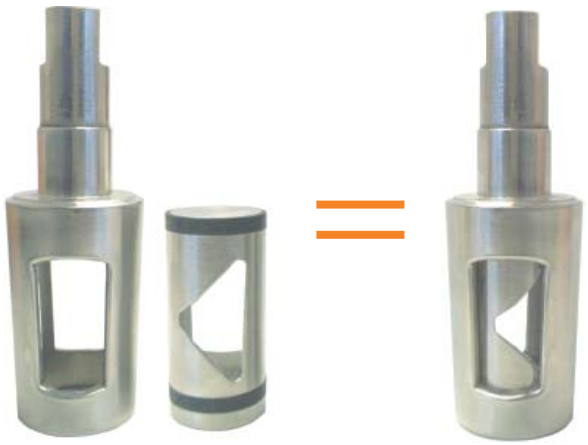



Characterized Plug

TYPICAL FLOW CHART FOR A 1" 60° V-PORT PLUG VALVE

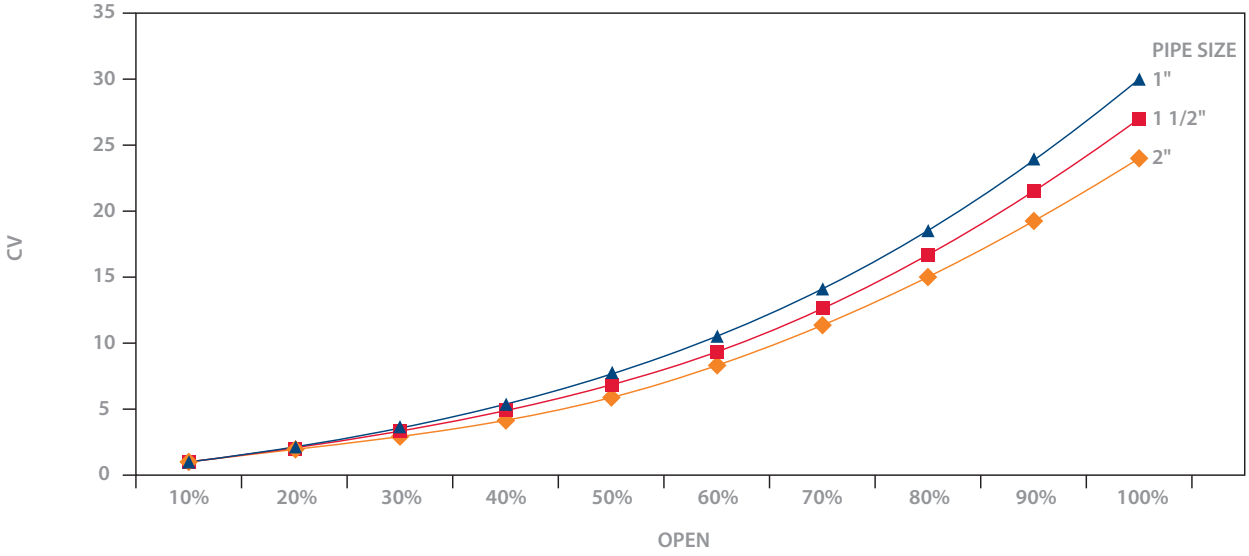

1 888 269 0220 (Canada & U.S.A.)

FluoroSeal Inc.

Specialty Valves

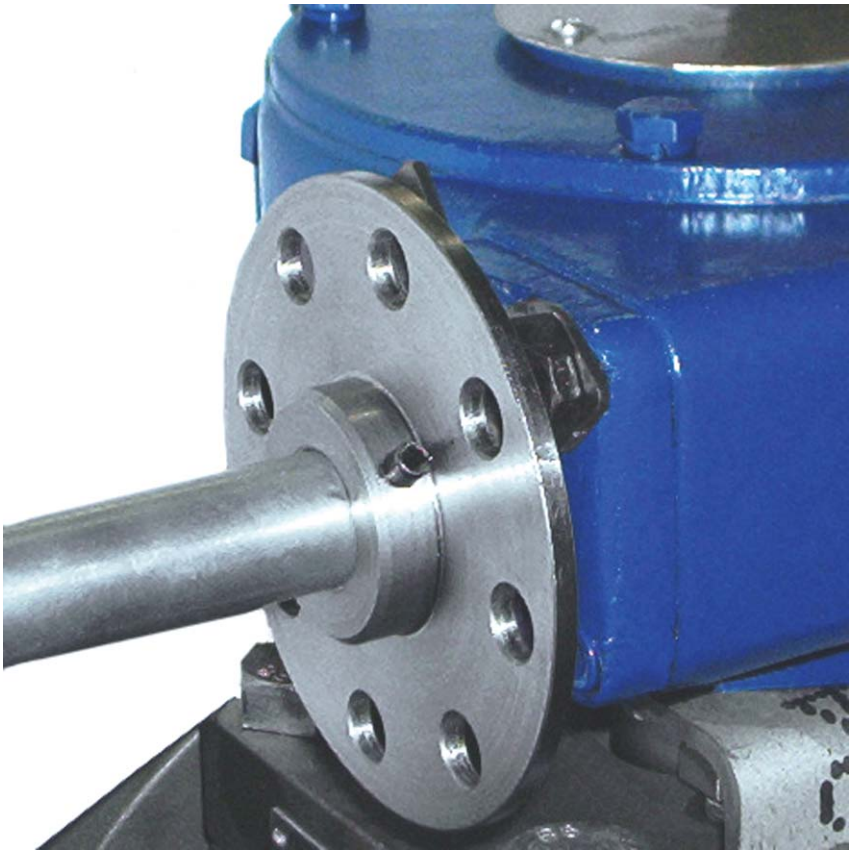

ACCESSORIES

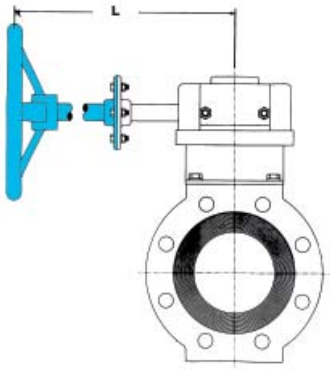

HANDWHEEL EXTENSION — GEAR OPERATOR

Custom extension to fit your particular space requirements. Please specify the length (L) needed. Support may be required depending on the length of the extension. (To be supplied by the customer.)

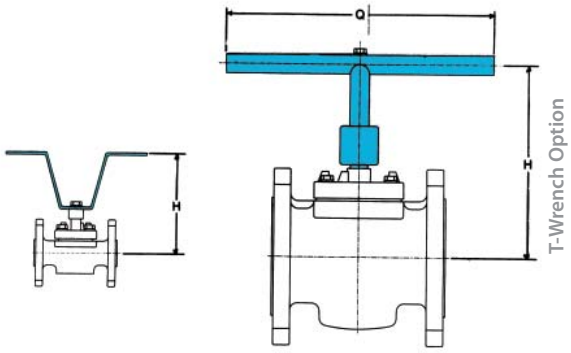

T-WRENCH AND EXTENSION OPTION

If longer "H" dimension, please specify.

VALVE SIZE	1/2" (DN 15)		3/4" (DN 20)		1" (DN 25)		1 1/2" (DN 40)		2" (DN 50)		3" (DN 80)		4" (DN 100)	
	in	mm	in	mm	in	mm	in	mm	in	mm	in	mm	in	mm
Q	12.00	304.80	12.00	304.80	12.00	304.80	16.00	406.40	24.00	609.60	24.00	609.60	36.00	914.40
H	6.00	152.40	6.00	152.40	7.00	177.80	8.00	203.20	8.00	203.20	9.00	228.60	10.00	254.00

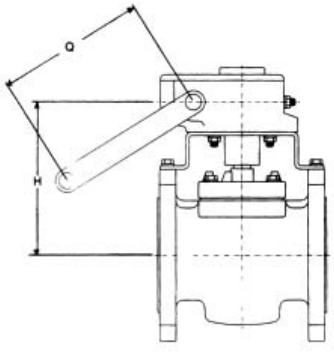

CRANK HANDLE

VALVE SIZE	4" EG (DN 100)		6" EG (DN 150)		8" EG		10" EG		12" EG	
	in	mm	in	mm	in	mm	in	mm	in	mm
Q	8.00	203.20	10.00	254.00	10.00	254.00	12.00	304.80	12.00	304.80
H	10.75	273.05	11.50	292.10	13.00	330.20	15.50	393.70	17.25	438.15
Handwheel Diameter										

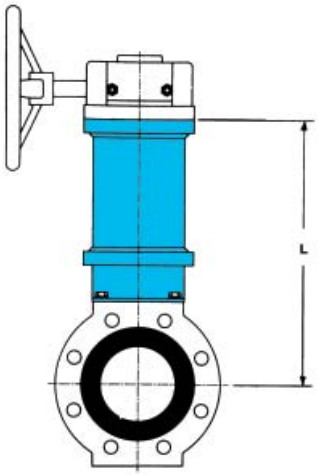

STEM EXTENSION — GEAR OPERATOR

Stem extensions are used for remote operation of the valve. Actuators can be attached to the top of the extension. Specify the length (L) of the extension required and the figure number of the valve it is to be attached to.

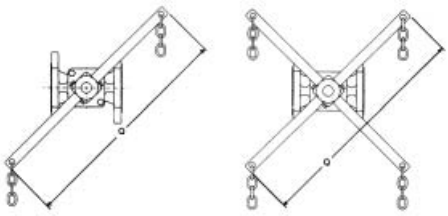

CHAIN WRENCH

Specify the chain length required and whether the valve will be installed in a horizontal or vertical line. To calculate chain length:

90° rotation: 1. Double required drop
2. Multiply Q by 0.5
3. 1+2 = required chain length

180° rotation: Double calculation for 90°

VALVE SIZE	1/2" (DN 15)		3/4" (DN 20)		1" (DN 25)		1 1/2" (DN 40)		2" (DN 50)		3" (DN 80)		4" (DN 100)	
	in	mm	in	mm	in	mm	in	mm	in	mm	in	mm	in	mm
Q	13.00	330.20	13.00	330.20	16.00	406.40	24.00	406.40	36.00	914.40	36.00	914.40	60.00	1524.00

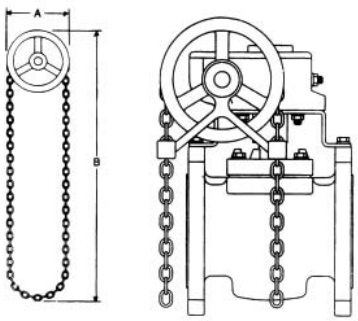

CHAIN WHEEL

Specify the chain length required and whether the valve will be installed in a horizontal or vertical line. To calculate chain length:

1. Double required drop B
2. Multiply chain wheel diameter A by 2.6
3. 1+2 = required chain length

WRENCH OPERATOR LOCKING DEVICE

Pad lock is not supplied.

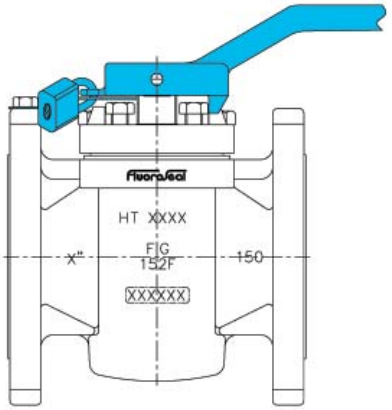

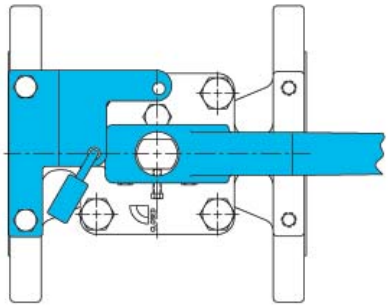

Locking Device on Regular Cover

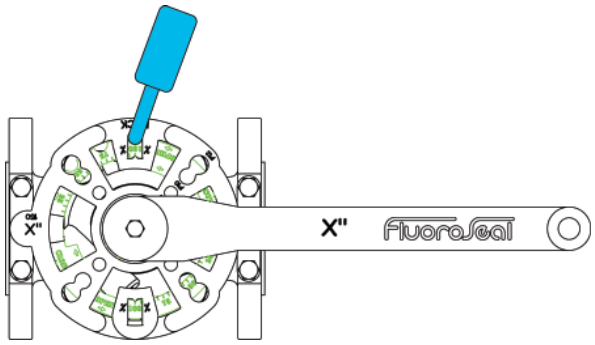

Locking Device on EZ-SEAL®

GEAR OPERATOR LOCKING DEVICE

Pad lock is not supplied.

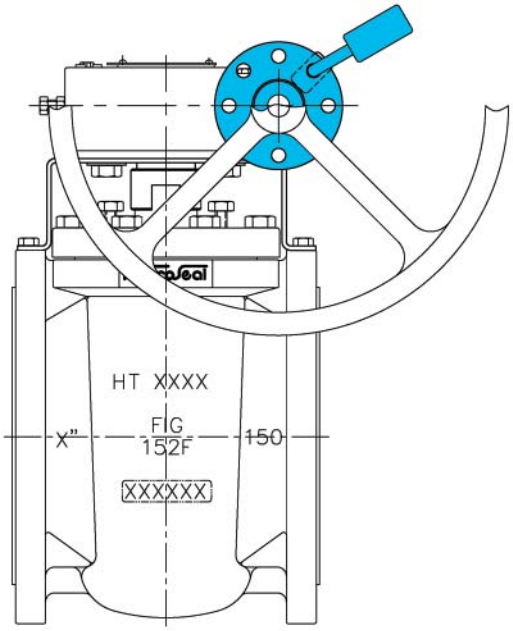

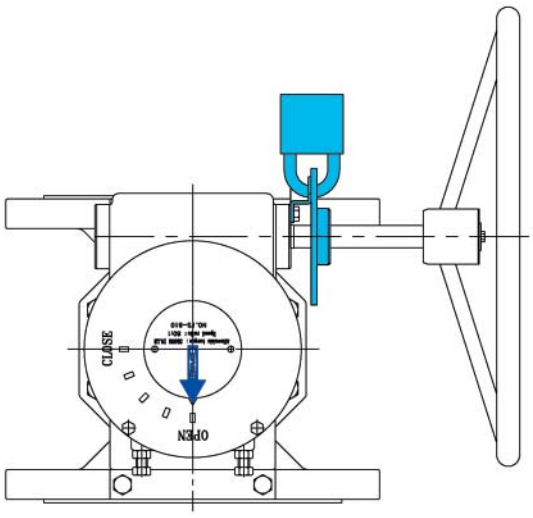

PLUG-ANSI-DIN-R001-2008

FluoroSeal Inc.

Specialty Valves



TECHNICAL DATA

ENGINEERED SOLUTIONS DIVISION (ESD)

Our Engineered Solutions Division (ESD) is staffed with highly skilled engineers, technicians and draftsmen specialized in modifying existing designs to meet your specific needs.


Chemical


Mining

OUR ENGINEERING COMMITMENT

We will assist you in making the most appropriate selection of alloys and polymers to suit your application. We will provide you with CV factors and other necessary flow calculations, therefore making your decision process as easy as possible. We will work together with you to develop the best valve possible, no matter what your industry sector:


Oil & Gas


Power Generation


Pulp & Paper

QUALITY ASSURANCE

FluoroSeal® Plug Valves possess all of the best design features presently available in a non-lubricated valve. They are inspected throughout the full manufacturing process from foundry to final assembly and packaging to assure high quality and consistency in every unit.

All valves are pressure tested prior to shipment and fully compliant to ANSI B16.34 (DIN EN 12266-1) shell tests and MSS SP-61 seat test requirements. All high nickel alloy valves are helium shell tested on a standard basis.

TESTING

- All FluoroSeal® valves are tested with dry air to 1.5 times the full rated pressure of ANSI/ASME Class 150 as per ANSI B16.34 paragraph 7.1 (DIN EN 12266-1)
- All FluoroSeal® valves in ANSI/ASME Classes 150, 300 and 600 lbs and DIN PN 16 to PN 40 are tested in full compliance with ANSI B16.34 paragraph 7.2 (DIN EN 12266-2)
- FluoroSeal® Fire Safe Valves are tested to API 607 Fifth Edition (ISO 104397-5)



CERTIFICATE OF APPROVAL

This is to certify that the Quality Management System of:

FluoroSeal, Inc.
Montreal, Quebec
Canada

has been approved by Lloyd's Register Quality Assurance to the following Quality Management System Standards:

ISO 9001:2000

The Quality Management System is applicable to:

Design and Manufacture of Industrial Valves for Oil and Gas, Petrochemical, Chemical, Pharmaceutical, Power Generation, Mining, Water Treatment, Pulp and Paper, Food and Beverage Applications.

Approval Certificate No: UQA 0113191

Original Approval: December 20, 2002
Current Certificate: July 27, 2007
Certificate Expiry: December 31, 2008

Issued by: LRQA, Inc. Houston

ISO 9001:2000 Certificate



Lloyd's Register

EC CERTIFICATE OF CONFORMITY

In accordance with the requirements of the Pressure Equipment Directive 97/23/EC and the Pressure Equipment Regulations 1999, UK Statutory Instrument 1999 No. 2001 and SI 2002 No. 1267

This is to certify that the Quality Management System of:

FluoroSeal, Inc.
1875 46° Avenue
Montreal, Quebec, H8T 2N8
Canada

has been assessed against the requirements of Annex III, Module H of the Pressure Equipment Directive 97/23/EC, and Schedule 4, Module H of the Pressure Equipment Regulations 1999 and conforms to the requirements for the products shown below:

Design, manufacture and testing of Plug valves

Approval is subject to the continued maintenance of the quality system in accordance with the requirements of the above Directive and Regulations.

Authorisation is hereby given to use the LRV Notified Body Identification Number in accordance with the requirements of the specified Directive and Regulations in relation to the products as identified above.

Certificate No: 0038/PED/20020103/A
Original Approval: 17 May 2003
Current Certificate: 17 August 2007
Certificate Expiry: 31 May 2009
LRV Notified Body Number 0038

S C Emeny on behalf of Lloyd's Register Verification



Lloyd's Register

EC CERTIFICATE OF CONFORMITY
CERTIFICATE 0038/PED/20020103/A SCHEDULE

In accordance with the requirements of the Pressure Equipment Directive 97/23/EC and the Pressure Equipment Regulations 1999, UK Statutory Instrument 1999 No. 2001 and 2002 No. 1267

FluoroSeal, Inc.
1875 46° Avenue
Montreal, Quebec, H8T 2N8
Canada

Products
Sleeved Plug Valves
1½" through 18" ASME 150, 300, 600 class
20" and 24" ASME 150, 300 class

Lined Plug Valves
1½" through 8" ASME 150 class

Schedule Issue: 04
Date of Schedule Issue: 17 August 2007
LRV Notified Body Number 0038

S C Emeny on behalf of Lloyd's Register Verification

EC Certificate of Conformity

PLUG-ANSI-DIN-R001-2008

1 888 269 0220 (Canada & U.S.A.)

TORQUE AND CV VALUES

Please consult our website, www.fluorosealvalves.com, for the most up-to-date listing of torque and CV values.

MATERIAL PROPERTIES

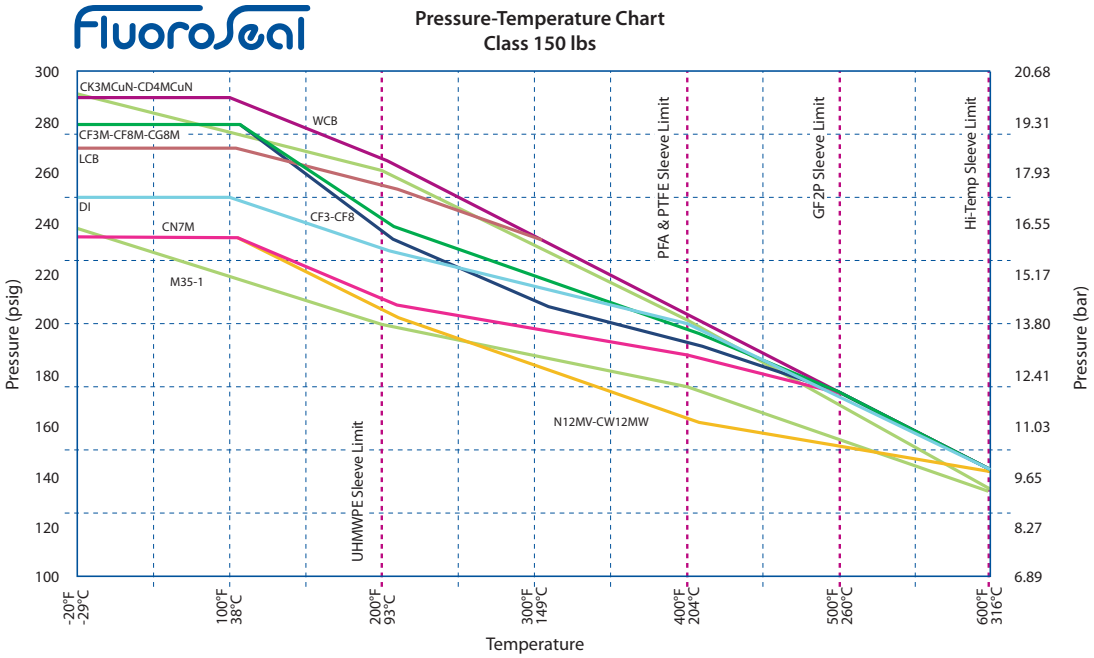

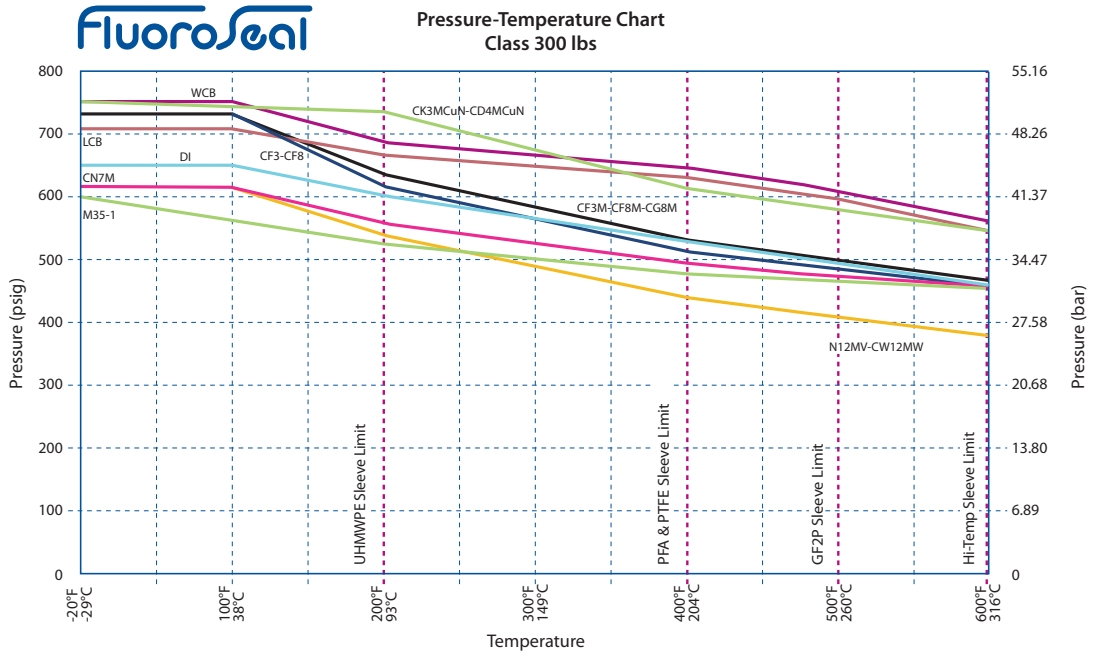

Pressure-Temperature Chart
Class 600 lbs

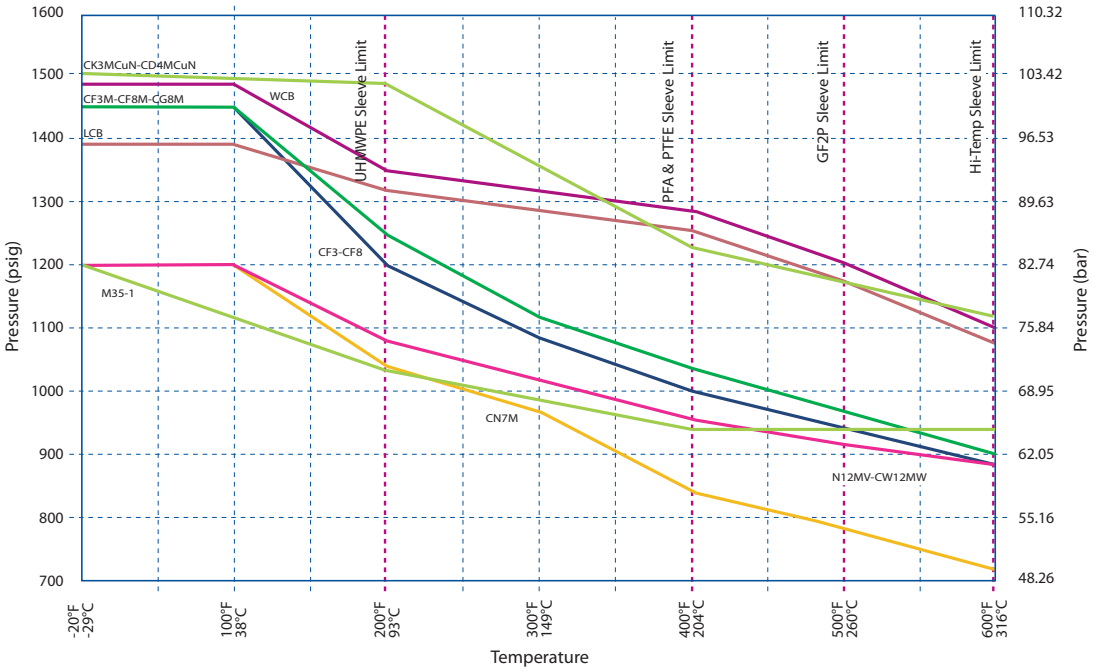

Pressure-Temperature Chart
PN 16

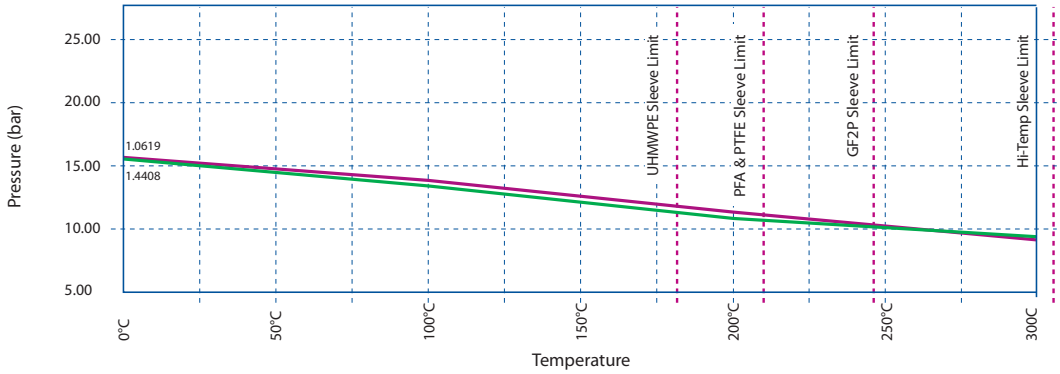

Pressure-Temperature Chart
PN 40

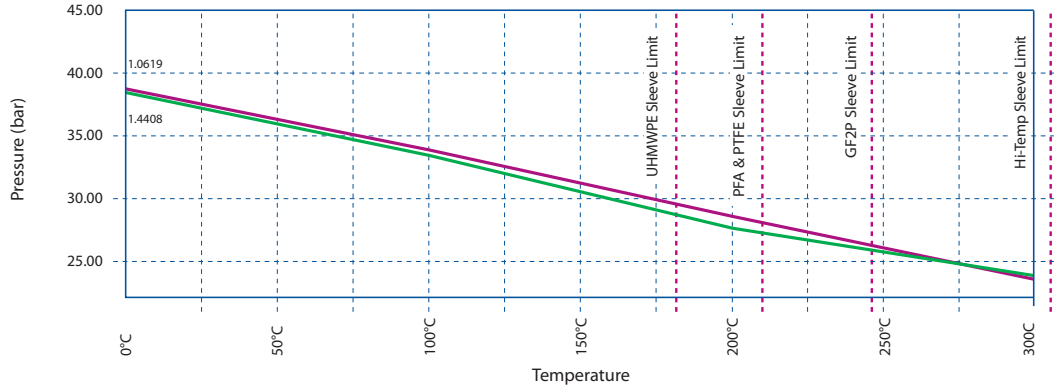

FLUOROSEAL INC. CORPORATE PROFILE

FluoroSeal Inc. is a privately owned company with headquarters located in Montréal, QC, Canada and specializing in the manufacturing and servicing of a full range of Sleeved and Lined industrial Plug Valves. Under current ownership since 2000 and experiencing a steady growth since, our staff is now composed of 120 employees worldwide.

Our team of highly skilled designers and engineers utilizes state-of-the-art design software to develop and customize existing and new product lines. The Quality Assurance and Quality Management staff ensure quality levels are maintained both in our own plants as well as those of our suppliers. Finally, our Customer Service group, jointly with our numerous representatives and distributors assists clients in meeting their needs for FluoroSeal® Plug Valves in standard and specific applications.

FluoroSeal Inc. is ISO 9001:2000 and PED certified and our products conform to a variety of international standards. FluoroSeal® Plug Valves are also approved by international corporations such as Bayer, DUPONT, Exxon/Mobil, Monsanto, Oxy Chemicals, and UOP among many others.



Montréal Headquarters

FLUOROSEAL INC. PRODUCTION & ASSEMBLY FACILITIES







Our experienced shop personnel work with the latest technology in machining and testing equipment.

PLUG-ANSI-DIN-R001-2008

ANSI/ASME SLEEVED PLUG VALVES ORDERING INSTRUCTIONS

Size	Port	Class	Flow	End Connection	Operator		Flow Pattern		Body Material	/	Plug Material	–	Sleeve Material	–	Special and / or Option
					/	–		–							

Size
Range available from 1/2" to 24"
Refer to catalog for Class availability

Port

R	Reduced
F	Full

Class

15	Class 150 lbs
30	Class 300 lbs
60	Class 600 lbs

Flow

2	2-Way
3	3-Way

End Connection

F	Flanged Raised Face
FF	Flanged Flat Face
SE	Screwed
SW	Socket Weld
X	Screwed x Socket Weld
BW	Butt Weld
S	Special

Operator

B	Bare Stem
EG	Enclosed Gear
EGL	Enclosed Gear + Locking Device
W	Wrench
WL	Wrench + Locking Device

Flow Pattern (Leave blank for 2-Way)
FA1, FA2, FA3, FA4, FA5
Refer to catalog for Flow Patterns

Body Material
Refer to Body & Plug Material Table

Plug Material
Refer to Body & Plug Material Table

Sleeve Material

A	PFA
G	GF2P
P	PTFE
R	RTFE
U	UHMWPE
Z	Hi-Temp Teflon®

Special
(A combination of Specials can be used)

CL	Prepared for Chlorine Service
DBB	Double Block & Bleed
FE	Severe Service
HF	HF Alkylation HydroFluoric Acid
HOX	Prepared for Hydrogen Peroxide
ISY	Prepared for Isocyanate Service
OXY	Prepared for Oxygen Service
PHOS	Prepared for Phosgene Service

Options
(A combination of Options can be used)

CCV	Cage Control Valve
EZ	EZ-SEAL®
FJ	Full Jacket
FS	Fire Seal
PJ	Partial Jacket
S	Special (Description required)
V6	V-Port 60°
VN	Vented Plug (Specify location and diameter)
	U Upstream
	D Downstream
	B Bottom

BODY & PLUG MATERIAL TABLE

CODE	DESCRIPTION	ASTM DESIGNATION	DIN
DI	Ductile Iron	ASTM A395	0.7043
WCB	Carbon Steel	ASTM A216 Gr. WCB	1.0619
LCB	Carbon St. Low Temp.	ASTM A352	1.6220
304	304 Stainless Steel	ASTM A351 Gr. CF8	
304L	304L Stainless Steel	ASTM A351 Gr. CF3	
316	316 Stainless Steel	ASTM A351 Gr. CF8M	1.4408
316L	316L Stainless Steel	ASTM A351 Gr. CF3M	
317	317 Stainless Steel	ASTM A351 Gr. CG8M	
317L	317L Stainless Steel	ASTM A351 Gr. CG3M	
A20	Alloy 20	ASTM A351 Gr. CN7M	1.4500
904L	904L Stainless Steel		1.453
CD4	CD4MCu	ASTM A351 Gr. CD4MCu	1.4463
HB	HASTELLOY® B	ASTM A494 Gr. N7M	2.4882
HB2	HASTELLOY® B 2	ASTM A494 Gr. N12MV	
HC	HASTELLOY® C	ASTM A494 Gr. CW6M	2.4883
HC2	HASTELLOY® C 2	ASTM A494 Gr. CW12MW	
I600	INCONEL®	ASTM A494 Gr. CY40	
NI	Nickel	ASTM A494 Gr. CZ-100	2.4816
MO	MONEL®	ASTM A494 Gr. M35-1	2.4365
TC2	Titanium (Comm. Pure)	ASTM B367 Gr. C2	
TC3	Titanium	ASTM B367 Gr. C3	3.7031
TC5	Titanium	ASTM B367 Gr. C5	
ZR2	Zirconium	ASTM B752 Gr. 702C	
ZR5	Zirconium	ASTM B752 Gr. 705C	

Other and Special Alloys Available on Request

TERMS & CONDITIONS

CONTROLLING PROVISIONS

These terms and conditions shall control with respect to any purchase order or sale of FluoroSeal Inc.'s products. No waiver, alteration or modification of these terms and conditions whether on Buyer's purchase order or otherwise, shall be valid unless the waiver, alteration or modification is specifically accepted in writing and signed by an authorized representative of FluoroSeal Inc.

THIS IS FLUOROSEAL INC.'S SOLE WARRANTY. FLUOROSEAL INC. MAKES NO OTHER WARRANTY OF ANY KIND, EXPRESSED OR IMPLIED, AND ALL IMPLIED WARRANTIES OF MERCHANTABILITY AND FITNESS FOR A PARTICULAR PURPOSE WHICH EXCEED THE AFORE STATED OBLIGATION ARE HEREBY DISCLAIMED BY FLUOROSEAL INC. AND EXCLUDED FROM THIS WARRANTY.

DELIVERY FluoroSeal Inc. will make every effort to complete delivery of products as indicated on its acceptance of an order, but FluoroSeal Inc. assumes no responsibility or liability, and will accept no backcharge, for loss or damage due to delay or inability to deliver caused by acts of God, war, labor difficulties, accident, delays of carriers, by contractors or suppliers, inability to obtain materials, shortages of fuel and energy, or any other causes of any kind whatever beyond the control of FluoroSeal Inc. FluoroSeal Inc. may terminate any contract of sale of its products without liability of any nature, by written notice to Buyer, in the event that the delay in delivery or performance resulting from any of the aforesaid causes shall continue for a period of sixty (60) days. Under no circumstances shall FluoroSeal Inc. be liable for any special or consequential damages or for loss, damage, or expense (whether or not based on negligence) directly or indirectly arising from delays or failure to give notice of delay.

WARRANTY FluoroSeal Inc. warrants for one year from the date of shipment of its manufactured products to the extent that FluoroSeal Inc. will replace those having defects in material or workmanship when used for the purpose and in the manner which FluoroSeal Inc. recommends. If FluoroSeal Inc.'s examination shall disclose to its satisfaction that the products are defective, and an adjustment is required, the amount of such adjustment shall not exceed the net sale price of the defective product(s) only and no allowance will be made for labor or expense for repairing or replacing defective products or workmanship or damage resulting from the same. FluoroSeal Inc. warrants the products which it sells of other manufacturers to the extent of the warranties of their respective makers. Where engineering design or fabrication work is supplied, Buyer's acceptance of FluoroSeal Inc.'s design or of delivery of work shall relieve FluoroSeal Inc. of all further obligation, other than expressed in FluoroSeal Inc.'s product warranty. FluoroSeal Inc. neither assumes, nor authorizes any person to assume for it, any other obligation in connection with the sale of its engineering designs or products. This warranty shall not apply to any products or parts of products which (a) have been repaired or altered outside of FluoroSeal Inc.'s factory, in any manner; (b) have been subjected to misuse, negligence or accidents; (c) have been used in a manner contrary to FluoroSeal Inc.'s instructions or recommendations. FluoroSeal Inc. shall not be responsible for design errors due to inaccurate or incomplete information supplied by Buyer or its representatives.

LIABILITY FluoroSeal Inc. will not be liable for any loss, damage, cost of repairs, incidental or consequential damages of any kind, whether based upon warranty (except for the obligation accepted by FluoroSeal Inc. under "Warranty" above), contract or negligence, arising in connection with the design, manufacture, sale, use or repair of the products or of the engineering designs supplied to Buyer.

RETURNS FluoroSeal Inc. cannot accept return of any product(s) unless its written permission has been first obtained, in which case same will be credited subject to the following: (a) all material returned must, on its arrival at FluoroSeal Inc.'s plant, be found to be in first-class condition; if not, cost of putting in saleable condition will be deducted from credit memoranda; (b) a handling charge deduction of twenty percent (20%) will be made from all credit memoranda issued for material returned; (c) transportation charges, if not prepaid, will be deducted from credit memoranda.

SHIPMENTS All products sent out will be carefully examined, counted and packed. The cost of any special packing or special handling caused by Buyer's requirements or requests shall be added to the amount of the order. No claim for shortages will be allowed unless made in writing within ten (10) days of receipt of a shipment. Claims for products damaged or lost in transit should be made to the carrier, as FluoroSeal Inc.'s responsibility ceases, and title passes, on delivery to the carrier.

SPECIAL PRODUCTS Orders covering special or non-standard products are not subject to cancellation except on such terms as FluoroSeal Inc. may specify on application.

PRICES AND DESIGNS Prices and designs are subject to change without notice. All prices are F.O.B. Point of Shipment, unless otherwise stated.

TAXES The amount of any sales, excise or other taxes, if any, applicable to the products, shall be added to the purchase price and shall be paid by Buyer unless Buyer provides FluoroSeal Inc. with an exemption certificate acceptable to the taxing authorities.

NUCLEAR PLANTS Where the products, engineering design or fabrication is for nuclear plant applications, Buyer agrees (a) to take all necessary steps to add FluoroSeal Inc. as an insured under the American Nuclear Insurers (ANI) pool and under the Mutual Atomic Energy Reinsurance Pool (MAERP) for property damage and liability insurance and if necessary steps could have been taken, but are not taken, Buyer shall hold FluoroSeal Inc. harmless against all such losses which could have been thus covered; (b) Buyer agrees to hold FluoroSeal Inc. harmless with respect to any personal injury or death, property damage or any other loss in a nuclear incident which is caused directly or indirectly by defective design, material, or workmanship, furnished by FluoroSeal Inc. and which is covered by insurance maintained by Buyer (or which could be so covered but with respect to which Buyer has elected to self-insure), and further agrees to waive subrogation by its carriers of such insurance against FluoroSeal Inc.; (c) as to nuclear hazards for which Buyer cannot obtain insurance coverage, the liability of FluoroSeal Inc. for any personal injury or death, property damage or any other loss directly caused by defective design, material, or workmanship furnished by FluoroSeal Inc. shall not exceed the value of the material furnished by FluoroSeal Inc. at the time of the loss occurrence.

MINIMUM INVOICE $100 plus shipping.

TERMS Cash, net 30 days unless otherwise specified.

FLUOROSEAL INC. WORLDWIDE

HEADQUARTERS

FluoroSeal Inc.

1875, 46e Avenue, Lachine, QC
Canada H8T 2N8
1 888 269 0220 (Canada and U.S.A.)
T: (514) 739 0220
F: (514) 739 5452

sales@fluorosealvalves.com
www.fluorosealvalves.com

SHANGHAI

FluoroSeal Shanghai

15R/F, First Trading Tower, 985#, Dong Fang Road
Pudong District, Shanghai, 200122 China
T: 86 21 50816431
F: 86 21 50818963

shanghai@fluorosealvalves.com
www.fluorosealvalves.com

AUSTRALIA

FluoroSeal Australia Pty. Ltd.

Unit 2, 42 Tacoma Circuit, Canning Vale
Western Australia 6155
T: (618) 6253 8011
F: (618) 6253 8044
M: 0447 538 011

australia@fluorosealvalves.com
www.fluorosealvalves.com

EUROPE

FluoroSeal Europe B.V.

P.O. Box 40075, NL-7504 RB
Enschede, The Netherlands
T: +31 (0)53 432 2411
F: +31 (0)53 431 4671
M: +31 (6) 5233 3389

europe@fluorosealvalves.com
www.fluoroseal.eu

PLUG-ANSI-DIN-R001-2008