Electric Linear Actuator
IQL Series



INTERNATIONAL
BS EN ISO 9001:2000
UKAS QUALITY MANAGEMENT

CE KTL

I-tork controls designs, produces and provides high quality electric actuator and services related to industrial valve automation and controls.
IQL series linear actuator has been developed for a wide range of linear applications and to service reliable performance, long trouble free operation, more flexibility and maximized ability to integrate fully into sophisticated control system.

Digital Display unit (Option)

Lever
Padlockable, switchable auto/manual lever for easy operation



Housing
Hard anodized aluminum alloy housing external powder coating against corrosive industrial environment

Handwheel

Indicator
Stroke Scale

Disc spring arrangement
providing accurate setting force and tight shut up for closing

Valve Stem
Pillar

Folding stack
Drive shaft protection

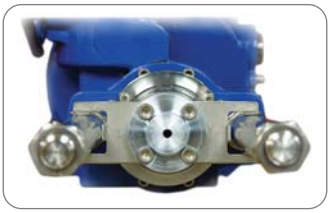

Mounting Coupler

-Robust construction, precise positioning, reliable performance
-Wide range of application

-Compact internal Arrangement
-Modulating control options can be installed on site

-Local control options for easy commissioning and emergency operation in the field

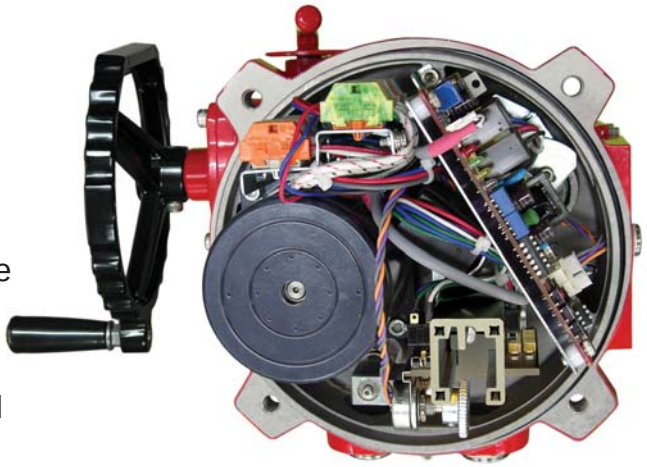

Electric Operation / Modulating control

-On-off

- Input : 4-20mA, 0-10VDC, 2~10VDC, 1~5VDC, 0~5VDC
- Output : 4-20mA
  (Option : 0-10VDC, 2~10VDC, 1~5VDC, 0~5VDC)
- Auto-calibration
- 0-10 V or other signal selection
- Transmitter output 4-20 mA

Simple and easier handling
and adjustment of Limit (from IQL04) &
Signal switches (from IQL08)

Terminal

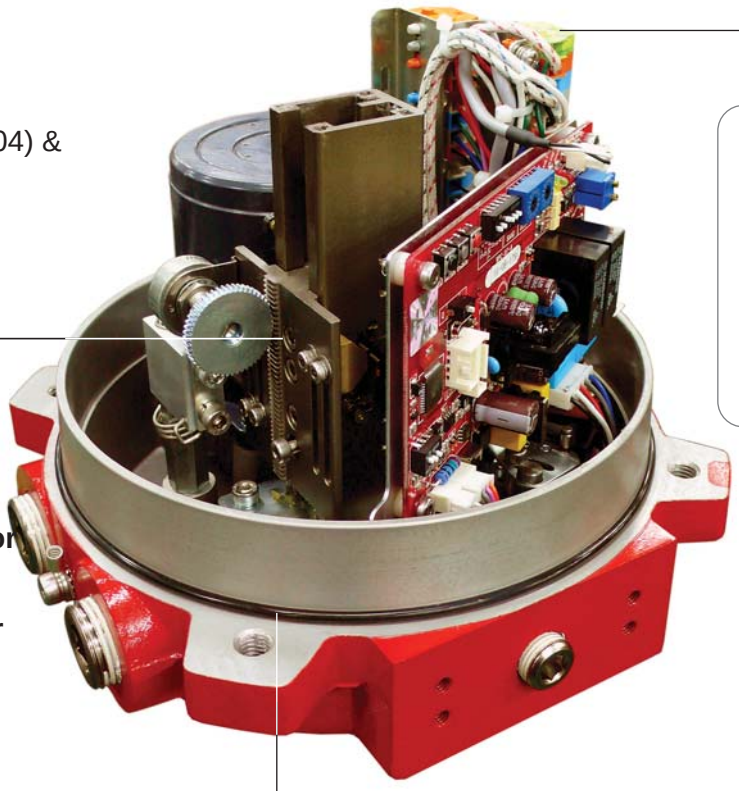





Indicator

Coupler

Pillar

Seals & O-rings
protection to water proof IP66

TECHNICAL DATA

Model		IQL 04	IQL 06	IQL 08	IQL 10	IQL 12	IQL 20	IQL 25
Thrust force	kN	4	6	8	10	12	20	25
Stroke	mm	40	40	50	50	50	100	100
Manual override		Handwheel with switchable declutchable lever						
Cable entry		PF 3/4"						
Ambient temperature		-20 ~ +70 °C						
Position indication		Scale on pillar indicated by indicator						
Mounting direction		Any direction except for heading downward						
Housing		Aluminum alloy hard anodized for anti-corrosion						
Positioning speed	mm / sec	Refer to individual technical data sheet						
Power supply		24 VDC, Single phase (110 / 220 VAC), 3phase (380 / 440VAC)						
Current draw		Refer to individual technical data sheet						
Motor protection		Themal protector (Class F)						
Operating mode	S2	Max. 30 Min					Max. 30 Min	
	S4	50% ED-1200 c/h					50% ED-800 c/h	
Weight	Kgs	7	8	15	16	17	20	22
Valve Stem threads	mm	M20(Max)	M20(Max)	M20(Max)	M20(Max)	M20(Max)	M24(Max)	M24(Max)
PCD on flange	mm	100	100	100	100	100	155	155
Pillar Threads		M16	M16	M16	M16	M16	M20	M20
Pillar material		Stainless steel, carbon steel with special surface treatment						

CONTROL OPTIONS

Local control _____ LP4 (Single phase), LM4 (3phase)
Fail safe _____ Battery back up
Integral _____ ICM1, ICM2
Modulating _____ RPC
Transmitter (feedback) _____ CT
Explosion proof _____ Exd II B T4

i-Tork® CONTROLS Co., Ltd.

Website : http://www.i-tork.com

* The details of this catalog are subject to change without prior notification.

© I-TORK® Controls Co., Ltd. All rights reserved. IQL-CA-1306

General technical data

		IQL 04	IQL 06
Force (Max)	**[KN]**	4	6
Stroke (Max)	**[mm]**	40	40
Positioning speed		0.7 / 0.83 mm/sec (50/60Hz)	0.7 / 0.90 mm/sec (50/60Hz)
Manual override		Handwheel with switchable declutchable lever	
Enclosure	**EN60529**	IP66	
Cable entry		2 - PF 3/4" TAP	
Position indicator		Gradulation on pillar pointed by carrier plate	
Housing		Aluminum alloy hard anodized for anti-corrosion	
Painting		Epoxy powder coated	
Ambient temperature	**[°C]**	-20 °C ~ +70 °C	
Operating mode IEC34-1, 8		S2 30 Min S4 1200 c/h 50%ED	
Weight	**[Kgs]**	9	9

Actuator speed and electric data

Rated current (A)		1 Phase				3 Phase				AC/DC
		110VAC		220VAC		380VAC		440VAC		
		50Hz	60Hz	50Hz	60Hz	50Hz	60Hz	50Hz	60Hz	24V
	IQL 04	0.45	0.44	0.26	0.25	0.3	0.31	0.28	0.40	3.0
	IQL 06	0.49	0.48	0.29	0.28	0.32	0.33	0.30	0.42	3.5
Motor protection		Thermal switch, Class F insulation								
Space heater		5 W (110/220VAC) for anti condensation								
Limit switch		1 each for open/close (SPDT 10A 250VAC rating)								

Valve mounting

		IQL 04	IQL 06
Valve stem threads	mm	M20 (Max)	M20 (Max)
PCD on flange	mm	100	100
Pillar Threads		M16	M16
Mounting direction		Any direction except for heading downward	
Pillar material		Non corrosive material	

Available optional controls

Remote position control	**RPC**	4-20mA input/output, Selectable other signal
Potentiometer	**PK**	0~1Kohm feedback
Current transmitter	**CT**	4-20mA output
AC/DC Converter	**ADC 16**	AC to DC converter

Local control

Local control (1phase)	**LP4**	Local control unit
Local control (3phase)	**LM4**	LP4 with reversing contactor and transformer
Explosion proof Exd IIB T4	**Nepsi**	



Dimensions(mm)

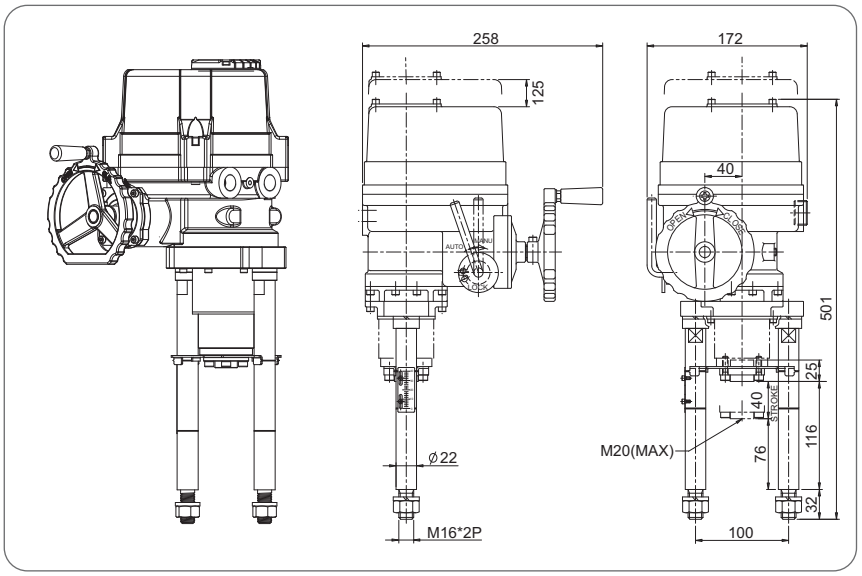

Correct mounting direction

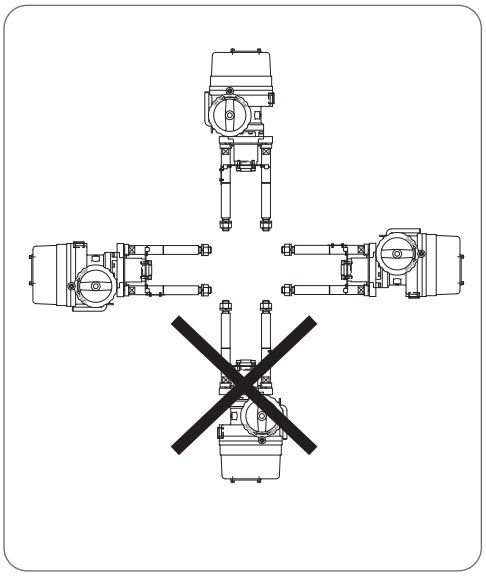

Setting closing(opening) force

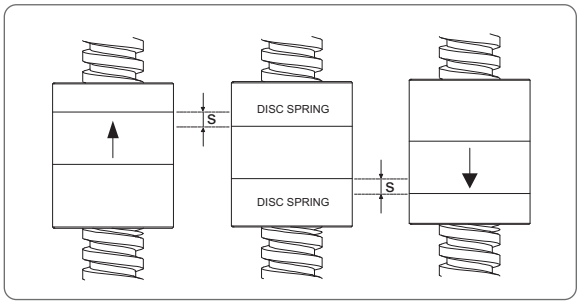

Disc spring arrangement

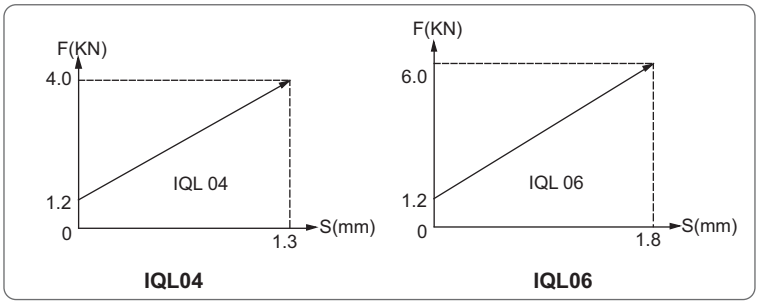

F : Closing(opening) force S : Amount of disc spring compression

Standard wiring

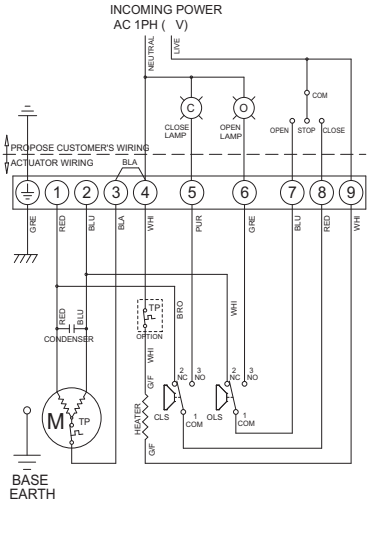

IQL04-70000-F
AC 110V/220V, 50/60Hz, 1PH
OPEN-CLOSE

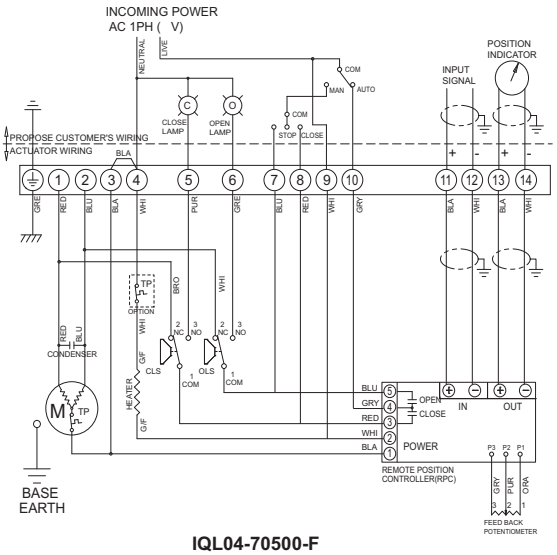

IQL04-70500-F
AC 110V/220V, 50/60Hz, 1PH
Modulating : RPC

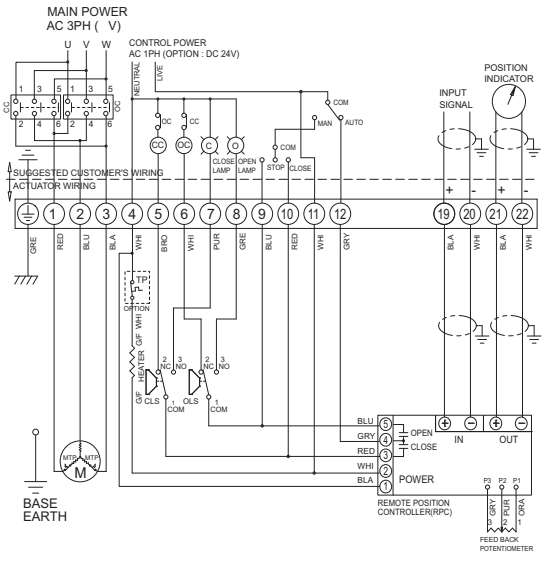

IQL04-80500-F
AC 380V/440V, 50/60Hz, 3PH
Modulating : RPC

© I-TORK® Controls Co., Ltd. All rights reserved.

General technical data

		IQL 08	IQL 10	IQL 12
Force (Max)	**[KN]**	8	10	12
Stroke (Max)	**[mm]**	50	50	50
Positioning speed		0.9 / 1.1 mm/sec (50/60Hz)	0.9 / 1.1 mm/sec (50/60Hz)	0.9 / 1.1 mm/sec (50/60Hz)
Manual override		Handwheel with switchable declutchable lever		
Enclosure	**EN60529**	IP66		
Cable entry		2 - PF 3/4" TAP		
Position indication		Gradulation on pillar pointed by carrier plate		
Housing		Aluminum alloy hard anodized for anti-corrosion		
Painting		Epoxy powder coated		
Ambient temperature	**[°C]**	-20 °C ~ +70 °C		
Operating mode IEC34-1, 8		S2 30 Min S4 1200 c/h 50%ED		
Weight	**[Kgs]**	18	18	18

Actuator speed and electric data

		1 Phase				3 Phase				AC/DC
		110VAC		220VAC		380VAC		440VAC		
		50Hz	60Hz	50Hz	60Hz	50Hz	60Hz	50Hz	60Hz	24V
Rated current (A)	IQL 08	0.92	0.88	0.48	0.46	0.18	0.17	0.17	0.16	2.90
	IQL 10	0.95	0.91	0.50	0.48	0.19	0.18	0.18	0.17	3.20
	IQL 12	0.98	0.94	0.52	0.50	0.20	0.19	0.19	0.18	3.50
Motor protection		Thermal switch, Class F insulation								
Space heater		5 W (110/220VAC) for anti condensation								
Limit switch		2 each for open/close (SPDT 10A 250VAC rating)								
Force switch		1 each for open/close (SPDT 10A 250VAC rating)								

Valve mounting

		IQL 08	IQL 10	IQL 12
Valve stem threads	mm	M20 (Max)	M20 (Max)	M20 (Max)
PCD on flange	mm	100	100	100
Pillar Threads		M16	M16	M16
Mounting direction		Any direction except for heading downward		
Pillar material		Stainless steel, carbon steel with special surface treatment		

Available optional controls

Remote position control	**RPC**	4-20mA input/output, Selectable other signal
Potentiometer	**PK**	0~1Kohm feedback
Current transmitter	**CT**	4-20mA input / output, Optional others
AC/DC Converter	**ADC 16**	AC to DC converter

Local control

Local control (1phase)	**LP4**	Local control unit
Local control (3phase)	**LM4**	LP4 with reversing contactor and transformer
Integral unit	**ICM1/2**	Local controller with phase discriminator
Battery back up unit	**BP**	Fail safe (Fail position either open/close/stay put)
Explosion proof Exd IIB T4	**Nepsi**	



Dimensions(mm)

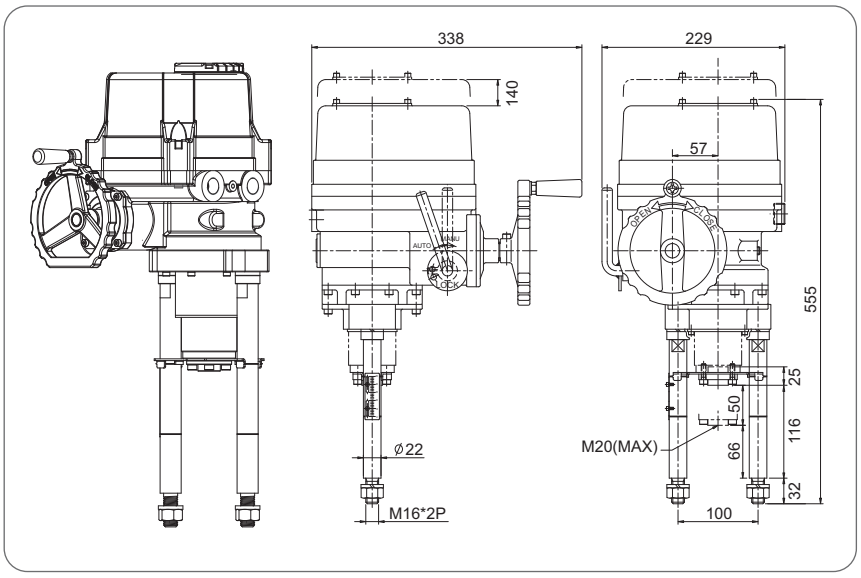

Correct mounting direction

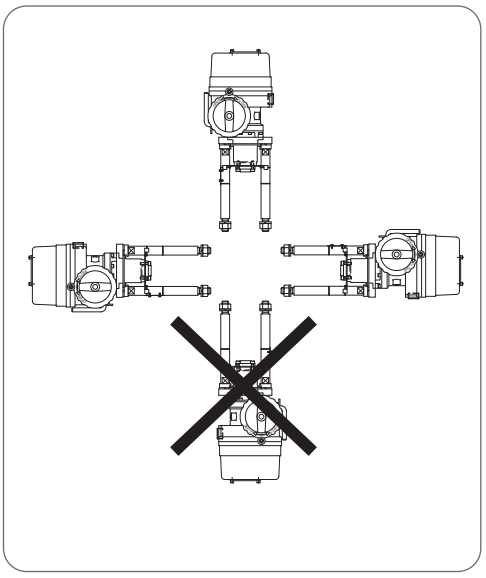

Setting closing(opening) force

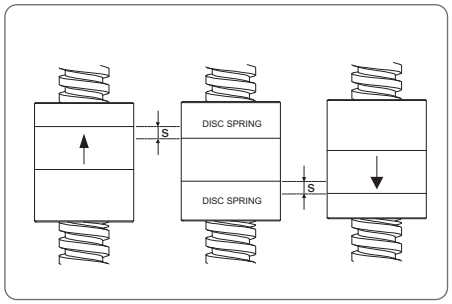

Disc spring arrangement

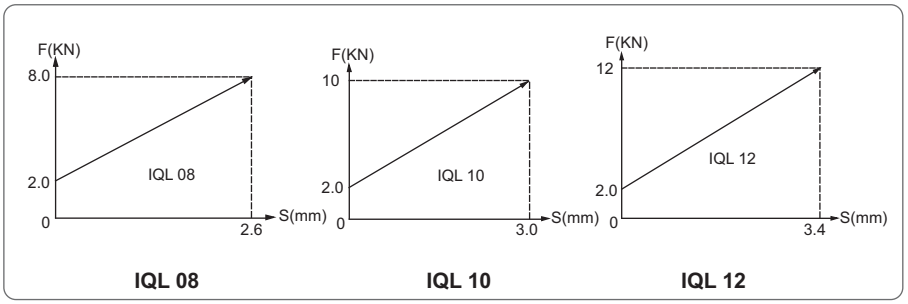

F : Closing(opening) force S : Amount of disc spring compression

Standard wiring

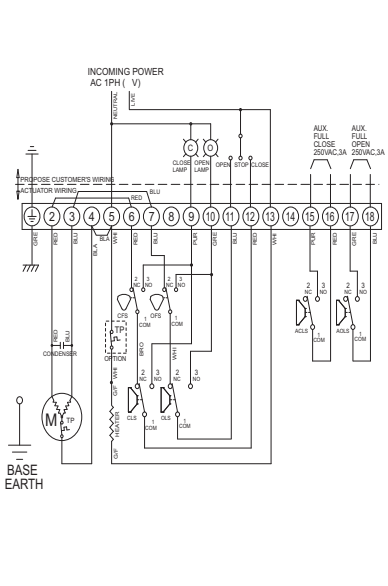

IQL08-70000-F
AC 110V/220V, 50/60Hz, 1PH
OPEN-CLOSE

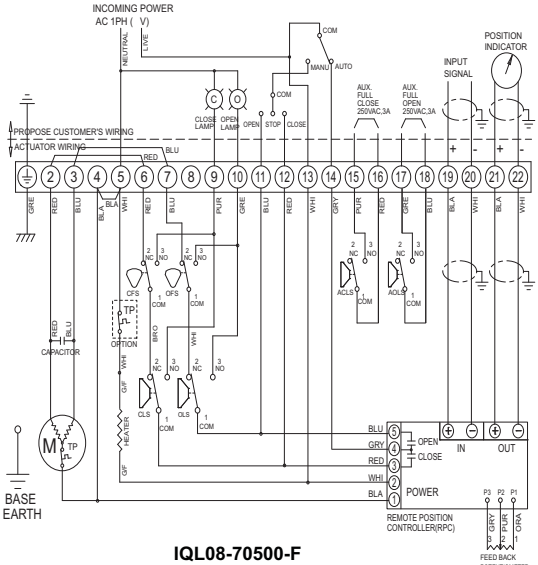

IQL08-70500-F
AC 110V/220V, 50/60Hz, 1PH
Modulating : RPC

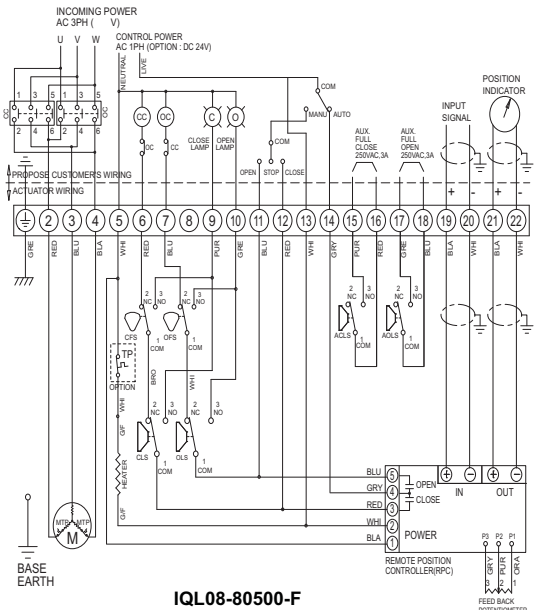

IQL08-80500-F
AC 380V/440V, 50/60Hz, 3PH
Modulating : RPC

© I-TORK® Controls Co., Ltd. All rights reserved.

General technical data

		IQL 20	IQL 25
Force (Max)	**[KN]**	20	25
Stroke (Max)	**[mm]**	100	100
Positioning speed		0.9 / 1.1 mm/sec (50/60Hz)	0.9 / 1.1 mm/sec (50/60Hz)
Manual override		Handwheel with switchable declutchable lever	
Enclosure	**EN60529**	IP66	
Cable entry		2 - PF 3/4" TAP	
Position indication		Gradulation on pillar pointed by carrier plate	
Housing		Aluminum alloy hard anodized for anti-corrosion	
Painting		Epoxy powder coated	
Ambient temperature	**[°C]**	-20 °C ~ +70 °C	
Operating mode IEC34-1, 8		S2 30 Min	S4 1200 c/h 50%ED
Weight	**[Kgs]**	23	24

Electric data

Rated current (A)		1 Phase				3 Phase				AC/DC
		110VAC		220VAC		380VAC		440VAC		
		50Hz	60Hz	50Hz	60Hz	50Hz	60Hz	50Hz	60Hz	24V
	IQL 20	1.75	1.68	0.93	0.89	0.3	0.3	0.32	0.31	6.0
	IQL 25	1.8	1.72	0.95	0.92	0.32	0.32	0.34	0.33	7.0
Motor protection		Thermal switch, Class F insulation								
Space heater		5 W (110/220VAC) for anti condensation								
Limit switch		2 each for open/close (SPDT 10A 250VAC rating)								
Force switch		1 each for open/close (SPDT 10A 250VAC rating)								

Valve mounting

Valve stem threads	mm	M24 (Max)	M24 (Max)
PCD on flange	mm	155	155
Pillar Threads		M20	M20
Mounting direction		Any direction except for heading downward	
Pillar material		Stainless steel, carbon steel with special surface treatment	

Available optional controls

Remote position control	**RPC**	4-20mA input/output, Selectable other signal
Potentiometer	**PK**	0~1Kohm feedback
Current transmitter	**CT**	4-20mA output
AC/DC Converter	**ADC 16**	AC to DC converter

Local control

Local control (1phase)	**LP4**	Local control unit
Local control (3phase)	**LM4**	LP4 with reversing contactor and transformer
Integral unit	**ICM1/2**	Local controller with phase discriminator
Battery back up unit	**BP**	Fail safe (Fail position either open/close/stay put)



Dimensions(mm)

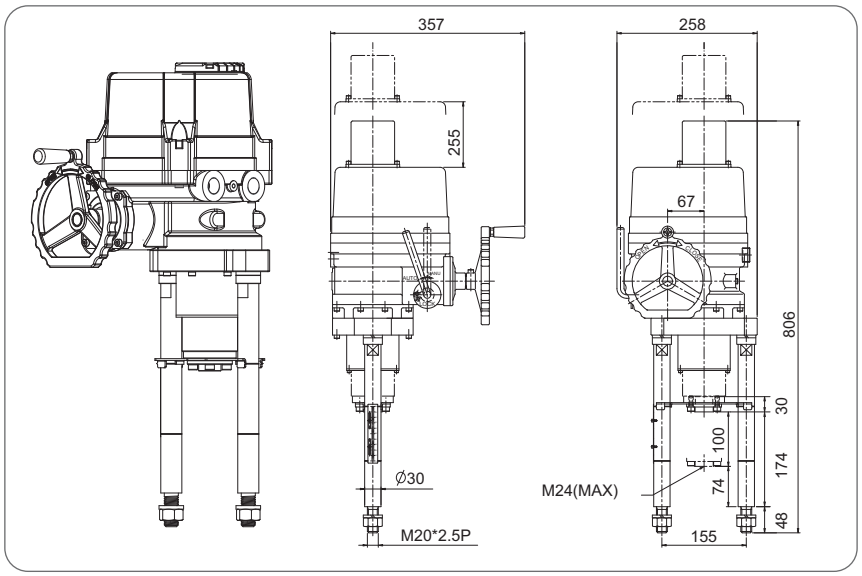

Correct mounting direction

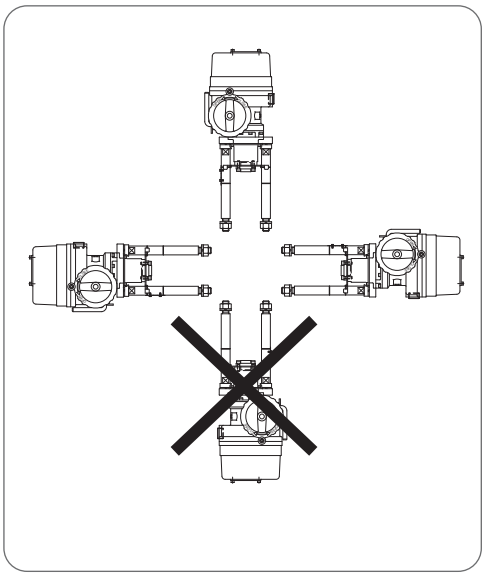

Setting closing(opening) force

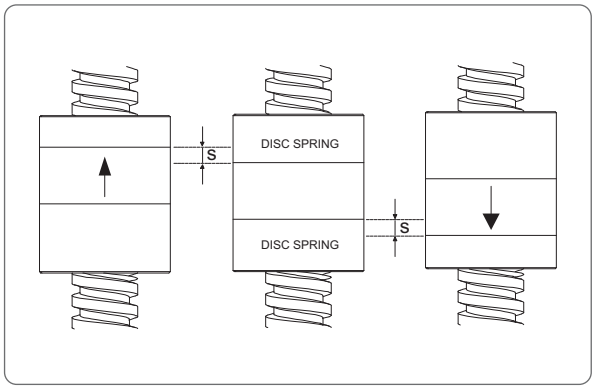

Disc spring arrangement

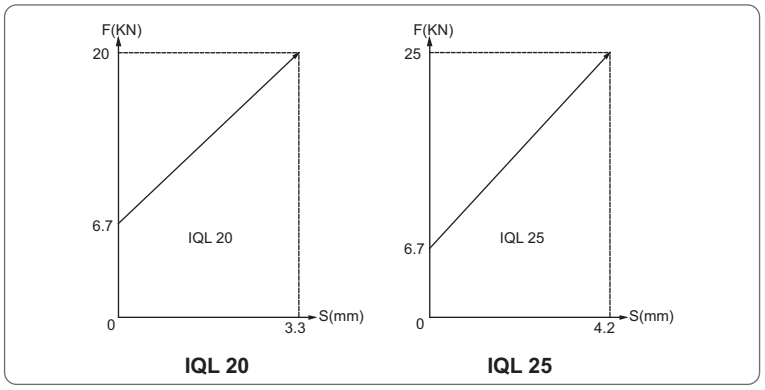

F : Closing(opening) force S : Amount of disc spring compression

Standard wiring

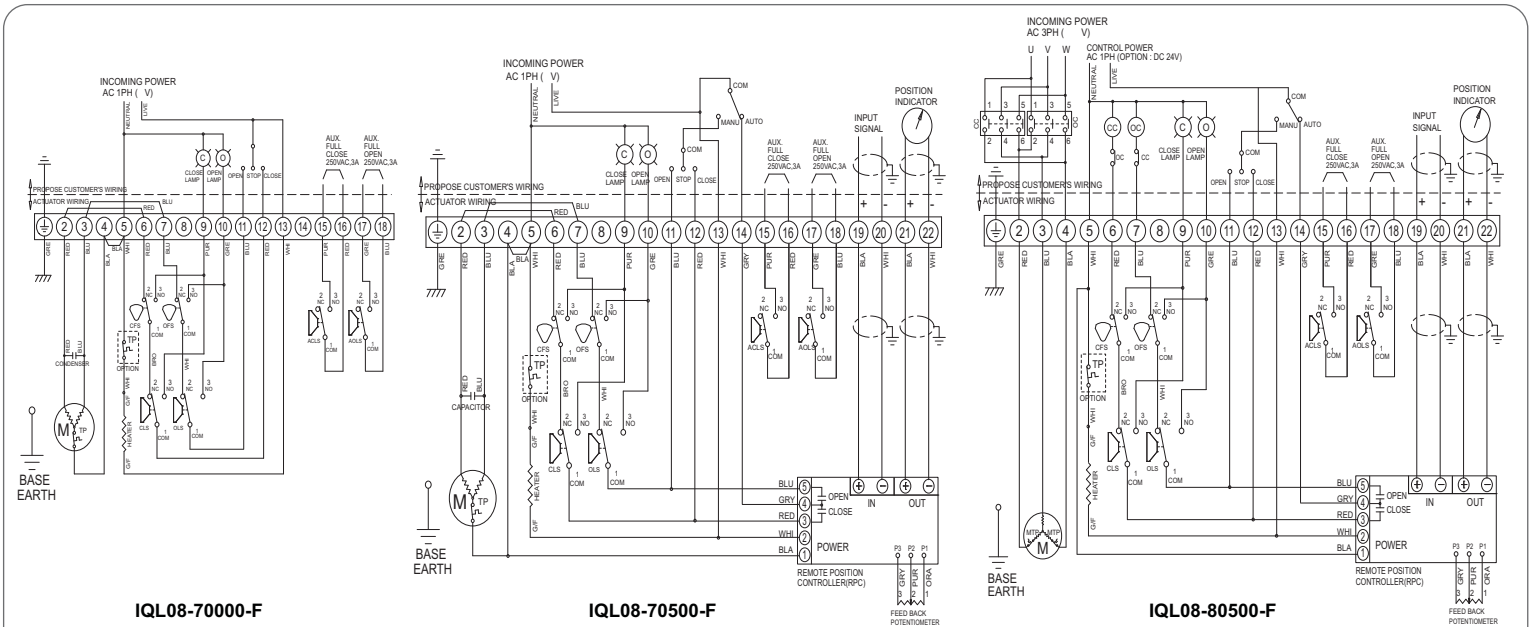

IQL08-70000-F
AC 110V/220V, 50/60Hz, 1PH
OPEN-CLOSE

IQL08-70500-F
AC 110V/220V, 50/60Hz, 1PH
Modulating : RPC

IQL08-80500-F
AC 380V/440V, 50/60Hz, 3PH
Modulating : RPC

© I-TORK® Controls Co., Ltd. All rights reserved.