Electric Actuator
MULTI-TURN

i-tork®

ITM Series

0180 / 0450 / 0750 / 1800 / 3000



INNOBIZ
기술혁신형중소기업

INTERNATIONAL
BS EN ISO 9001:2000
UKAS QUALITY MANAGEMENT

INTRODUCTION

With many years of experience with wide range of products used in the Valve Automation field. I-TORK® has achieved successful reputation and technical improvement to take another step forward once again.
"I-TORK® Controls Ltd.", are pleased to introduce our Multi-turn Electric Actuator the 'ITM Series'.
Following on from our well-known Quarter-turn Electric Actuator the 'ITQ Series'.
Our ITM Series is expected to be a valued addition to our range of industrial valve automation products with the same proven reliability as our Quarter-turn 'ITQ Series'.
We are now able to provide our customers with the complete actuators solution, whether it is a Quarter-turn or a Multi-turn solution that is required.
Meeting with our customers needs and requirements is our top priority.
Rest assured that our After Sales service is second to none.
We stand behind our products 100%.

Main Application Fields

ENERGY : Petrochemical/Oil-Refining Facilities, Power Plants, District Heating Systems,

WATER TREATMENT : Filtration, Sewage Disposal Plants, Reservoirs, Pump Stations, Sluice Gates, Dams,

CHEMICAL PLANT : Pharmaceutical Factories, Various Industrial Plants,

OTHERS : Steel Mills, Cement Factories, Shipbuilding (Ship-Yards), Food Factories, HVAC, and so on.



INTRODUCTION



General Information

-. High efficiency & torque motor with thermal protectors
-. Digitalized torque sensing system
(adjustable range: 30% - 100%)
-. Precisely machined gearing system & oil lubrication
-. Top-mounted hand-wheel for easy operation
-. Battery back-up for position detecting system
-. Integrated local control unit
-. 52-pin terminal block
-. Mounting base according to ISO5210
-. Bushing for adapting valve stem
-. Remote control for setting device/tool
-. IP68 Enclosure (10m for 100hrs in water)

STANDARD SPECIFICATIONS

*MAIN POWER : 3PH, AC 220/380/400/415/440/460/480 V, 50/60Hz (±10%)
*MOTOR : TENV, External Cooling Pin, Insulation Class: F, Thermostat,
*REMOTE MONITORING SWITCH :
Standard-8EA (S1-S8, LATCH, AC250V 2A), Other-1EA (FAULT, 1C)
*INDICATION ON LOCAL CONTROL PANEL :
Graphic LCD, 4-LED (Power, Fault, Close, Open)
*TERMINAL : Double Sealing Structure with O-ring
-. CONTROL : 48 Contacts/M4 (Voltage rated: AC250V 5A)
-. POWER : 4 Contacts/M5 (Voltage rated: AC660V 63A)
*ENCLOSURE : IP68 (10m for 100hrs in water)
*SPACE HEATER : 10W, DC 24V
*OPERATIONAL TEMPERATURE : -20°C ~ 70°C
*MANUAL HAND-WHEEL : Top-mounted, directly connected to drive sleeve,
switching lever (manual-electric) with automatic reset
*CABLE ENTRY : 1 - PF1 1/2”, 2 - PF1”
*LOCAL CONTROL PANEL :
Selector Switch for OPEN/CLOSE, Selector Switch for REMOTE/STOP/LOCAL
*STANDARD PAINTING : Liquified Paint

OPTION

*REMOTE SIGNAL TRANSMITTER : CT (Current Transmitter) (Output: 4-20mA)
*MODULATING : RPC (Remote Position Controller)
-. INPUT SIGNAL : 4-20mA, 0-10VDC, 2-10VDC, 0-5VDC, 1-5VDC
-. OUTPUT SIGNAL : 4-20mA (Option: 0-10VDC)
*FIELDBUS : Profibus, CANopen, other Bus communication protocol types available
*EXPLOSION-PROOF : Ex d IIC T4

FEATURES (Cut-away)

MANUAL HAND-WHEEL AND SWITCHING LEVER

Top-Mounted Hand-wheel for easy manual operation
No-interruption structure while installing actuator
Simple switching from electric to manual (by switching lever even when the motor is running)
Automatic switching from manual to electric (if the motor is running by electricity)

BATTERY HOLDER

Battery : U9VL (9V, 1200mAh)
LITHIUM/Manganese Dioxide Designation
NEDA 1604LC

MOTOR (TENV Type)

TENV (Totally Enclosed Non-Ventilated) Type
Insulation Class: F, Thermostat installed, Standard Rating : 15min.
Voltage: available within +/-10%
Large torque Motor with a large output starting torque
Radiating Cooling Plate to maximize radiation effect
in high temperature during abnormal operation
Motor is mounted in easy-detachable structure
(for easy replacement if damaged)

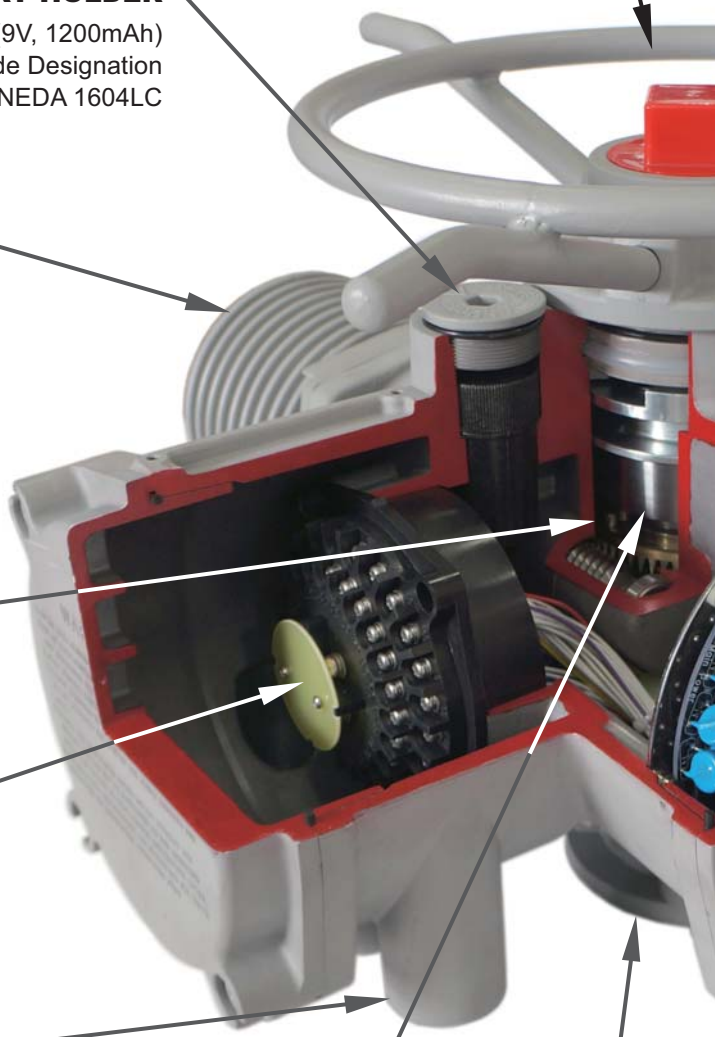

DECELERATOR / REDUCTION-GEAR

Highly efficient ‘single reduction gear (worm)’ ensures low noise
Higher efficiency compared to multi-level gearing

TERMINAL UNIT

Double sealing structure with O-ring
to protect the inside of the actuator
when terminal cover is open
Rigid outer wiring

CABLE ENTRY

Various types available

LUBRICANT

Oil lubrication of worm reduction gear
Stable operation ensured even in extremely low temperature

THRUST UNIT

Detachable, as separate from the actuator main body for easy installation
Ductile material, Drive bushing and Thrust bearing
Drive Bushing: two (2) types for Quarter-turn and Multi-turn

FEATURES (Cut-away)

POSITION DETECTING SWITCH

Hall Incremental Encoder developed by I-TORK to ensure accurate valve position detection,
Valve position memorized and recorded accurately even without power supply

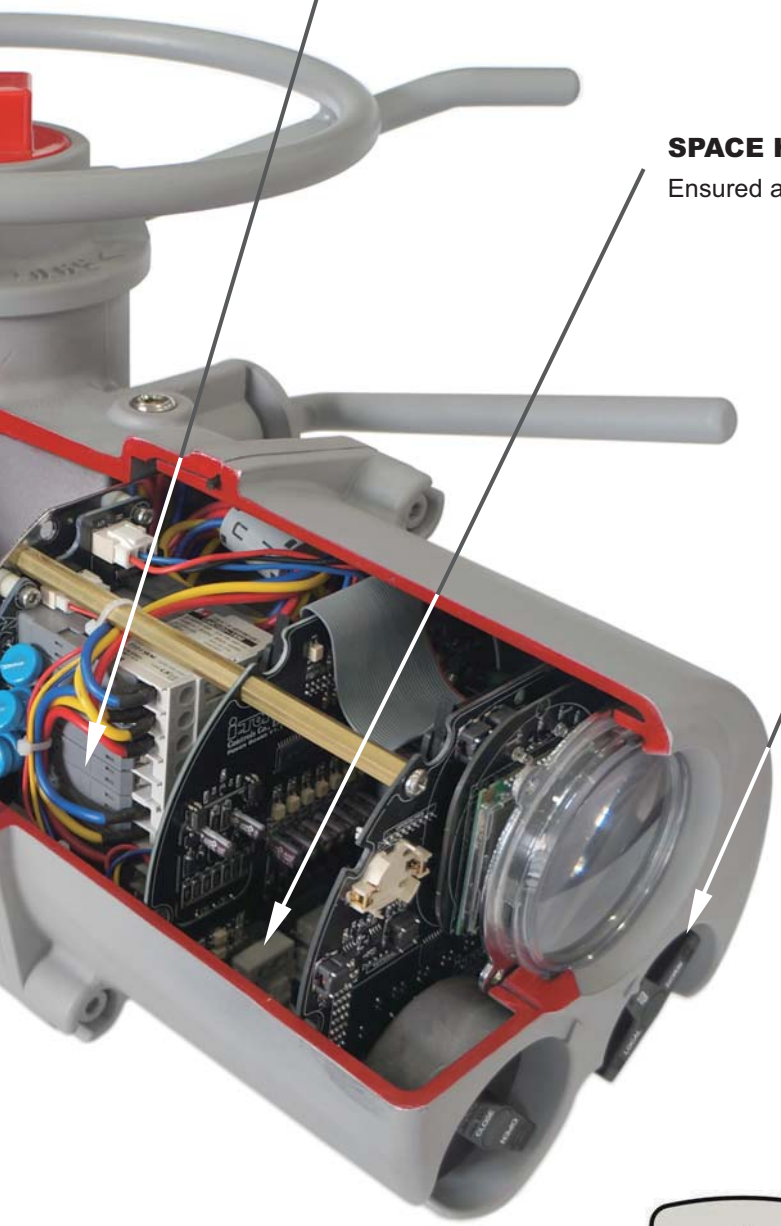

SPACE HEATER

Ensured anti-condensation

LOCAL CONTROL

All selector switches : non-penetration type and complete separation to ensure insulation with internal circuit, Remote Control and Selector Switches to ensure easy setting and checking of the actuator condition (no need to open local control cover), Water-proof

-. Operating Selector Switch:
Open/Close, Remote/Stop/Local,
Indication and Setting on LCD display,
Remote Control Receiver

-. Integral Unit:
Automatic Phase Change,
Negative/Open Phase Protection, Transformer,
Magnetic Contactor,
CPU Card, Relay Card

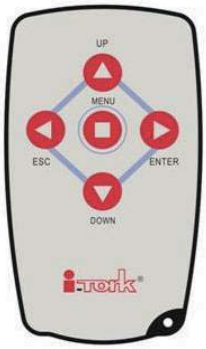

REMOTE CONTROL

Up/Down/ESC/Enter/Menu, Weather-proof (up to IP67)
Size : 80 x 46 x 11.2mm
Power : 3.0V DC, CR2025 x 1pcs

MAIN POWER	3PH, AC 220/380/400/415/440/460/480V, 50/60Hz, (±10%)
CONTROL POWER	INTERNAL POWER: DC 24V EXTERNAL POWER: AC/DC 24V~48V EXTERNAL POWER: AC 110V, 1PH EXTERNAL POWER: AC 220V, 1PH
LOCAL CONTROL	OPEN/CLOSE LOCAL/STOP/REMOTE - SELECTABLE
INTERLOCK	INCHING / HOLDING NORMAL (CW=CLOSE) / REVERSE (CCW=CLOSE)
STATUS (DRY CONTACT : N/O)	OPENING (LATCH, *N/O, N/C) FULL OPEN (LATCH, *N/O, N/C) CLOSING (LATCH, *N/O, N/C) FULL CLOSE (LATCH, *N/O, N/C) CLOSE OVER TORQUE (LATCH, *N/O, N/C) OPEN OVER TORQUE (LATCH, *N/O, N/C) REVERSE 3PH (LATCH, *N/O, N/C) LOCAL / REMOTE STATUS (LATCH, *N/O, N/C) POWER FAIL (N/C) (*I-TORK Standard)
PROTECTION	From Reversed-Phase and Open-Phase Auto-Phase Discriminator or Phase-Protection Motor Protection with built-in TP in the motor
ESD (EMERGENCY SHUTDOWN)	User can select the status of the actuator when ESD signal is detected; CLOSE / STOP / OPEN
MODULATION	INPUT SIGNAL: DC 4-20mA / DC 0-5V / DC 0-10 / DC 1-5V / DC 2-10V FAIL SAFE POSITION: CLOSE / STOP / OPEN (When Input Signal Lost) OUTPUT SIGNAL: DC 4-20mA
DISPLAY	LCD: 128 x 64 Graphic LCD 4 LEDs POWER : WHITE FAULT : YELLOW CLOSE : GREEN OPEN : RED

TECHNICAL INFORMATION
MECHANICAL SPECIFICATIONS

ITM	180	450	750	1800	3000
BODY TYPE	TOP HANDLE			SIDE HANDLE	
GEARING	WORM GEAR				
ENCLOSURE	IP-68				
EXPLOSION PROOF	Ex d II C T4 (Optional)				
MAX TORQUE (Nm/Kg.m)	177/ 18	441 / 45	735 / 75	1,765 / 180	2,942 / 300
rpm 50/60Hz	12/14, 16/19, *23/28, 32/38, *48/57, *73/87, *98/118				
STEM Ø KEY	Ø 35	Ø 50	Ø 60	Ø 95	Ø 115
STEM SCREW	TW40	TW60	TW72	TW110	TW130
FLANGE (ISO 5210)	F10	F14	F16	F25	F30
DECLUTCHING	AUTO				
TORQUE SWITCHES	TORQUE SENSOR				
LIMIT SWITCHES	HALL INCREMENTAL ENCODER				
DISPLAY	128 X 64 Graphic LCD / 4-LED				
DUTY CYCLE	S2 : 15min (Option - S4 : 30~50%)				
MOTOR CLASS (INSULATION)	F				
MAIN POWER	3PH, AC 220/380/400/415/440/460/480V, 50/60Hz (±10%)				
AMBIENT TEMPERATURE	-20°C ~ 70°C				
TERMINAL	52 PIN			75 PIN	
CABLE ENTRIES	*1-PF 1-1/2", NPT 1-1/2" *2 - PF 1", 2 - NPT 1"			4 - PF 1", 4 - NPT 1"	
BODY MATERIAL	ALUMINUM ALLOY				
LUBRICATION	GREASE (EP-000)				

*I-TORK Standard



SPEED TORQUE TABLE

(*STANDARD)

MODEL	RPM 50/60Hz		12/14	16/19	*23/28	32/38	*48/57	*73/87	*98/118
	Motor (Kw)		Max. Torque (Nm / Kgf.m)						
ITM 0180	0.2	Nm	83.4 / 69.6	62.8 / 52.0	43.1 / 34.3	55.9 / 47.1	38.2 / 31.4	33.3 / 27.5	27.5 / 22.6
		Kgf.m	8.5 / 7.1	6.4 / 5.3	4.4 / 3.5	5.7 / 4.8	3.9 / 3.2	3.4 / 2.8	2.8 / 2.3
	0.4	Nm	167 / 139	125 / 104	85.3 / 68.6	112 / 93.2	76.5 / 61.8	67.7 / 25.5	54.9 / 44.1
		Kgf.m	17.0 / 14.2	12.7 /10.6	8.7 / 7.0	11.4 / 9.5	7.8 / 6.3	6.9 / 2.6	5.6 / 4.5
	0.75	Nm	177 / 177	177 / 177	161 / 129	177 / 177	114 / 116	127 / 101	103 / 82.4
		Kgf.m	18.0 / 18.0	18.0 / 18.0	16.4 / 13.2	18.0 / 18.0	14.7 / 11.8	12.9 / 10.3	10.5 / 8.4
ITM 0450	0.75	Nm	326 / 273	244 / 204	168 / 134	226 / 188	155 / 125	128 / 103	103 / 82.4
		Kgf.m	33.2 / 27.8	24.9 / 20.8	17.1 / 13.7	23.0 / 19.2	15.8 / 12.7	13.1 / 10.5	10.5 / 8.4
	1.5	Nm	441 / 441	441 / 408	335 / 270	441 / 377	309 / 249	256 / 206	206 / 166
		Kgf.m	45.0 / 45.0	45.0 / 41.6	34.2 / 27.5	45.0 / 38.4	31.5 / 25.4	26.1 / 21.0	21.0 / 16.9
	2.2	Nm	441 / 441	441 / 441	441 / 395	441 / 441	441 / 365	376 / 303	302 / 243
		Kgf.m	45.0 / 45.0	45.0 / 45.0	45.0 / 40.3	45.0 / 45.0	45.0 / 37.2	38.3 / 30.9	30.8 / 24.8
ITM 0750	1.5	Nm	624 / 523	468 / 390	321 / 259	428 / 357	293 / 236	252 / 203	209 / 169
		Kgf.m	63.6 / 53.3	47.7 / 39.8	32.7 / 26.4	43.6 / 36.4	29.9 / 24.1	25.7 / 20.7	21.3 / 17.2
	2.2	Nm	735 / 735	686 / 573	471 / 380	627 / 524	430 / 346	370 / 297	307 / 247
		Kgf.m	75.0 / 75.0	70.0 /58.4	48.0 / 38.7	63.9 / 53.4	43.8 / 35.3	37.7 / 30.3	31.3 / 25.2
	3.7	Nm	735 / 735	735 / 735	735 / 637	735 / 735	723 / 582	621 / 500	517 / 416
		Kgf.m	75.0 / 75.0	75.0 / 75.0	75.0 / 65.0	75.0 / 75.0	73.7 / 59.3	63.3 / 51.0	52.7 / 42.4
ITM 1800	3.7	Nm	1,677 / 1,402	1,255 / 1,049	863 / 693	1,079 / 901	740 / 596	633 / 509	508 / 409
		Kgf.m	171 / 143	128 / 107	88.0 / 70.7	110 / 91.9	75.5 / 60.8	64.5 / 51.9	51.8 / 41.7
	5.5	Nm	1,765 / 1,765	1,765 / 1,559	1,275 / 1,030	1,608 / 1,344	1,098 / 886	939 / 757	755 / 608
		Kgf.m	180 / 180	180 / 159	130 / 105	164 / 137	112 / 90.3	95.8 / 77.2	77.0 / 62.0
	7.5	Nm	1,765 / 1,765	1,765 / 1,765	1,746 / 1,402	1,765 / 1,765	1,500 / 1,206	1,285 / 1,030	1,030 / 829
		Kgf.m	180 / 180	180 / 180	178 / 143	180 / 180	153 / 123	131 / 105	105 / 84.5
ITM 3000	7.5	Nm	2,942 / 2,942	2,942 / 2,550	2,089 / 1,687	2,001 / 1,667	1,373 / 1,108	1,353 / 1,089	1,079 / 869
		Kgf.m	300 / 300	300 / 260	213 / 172	204 / 170	140 / 113	138 / 111	110 / 88.6
	11	Nm	2,942 / 2,942	2,942 / 2,942	2,560 / 2,059	2,932 / 2,452	2,010 / 1,618	1,677 / 1,353	1,344 / 1,079
		Kgf.m	300 / 300	300 / 300	261 / 210	299 / 250	205 / 165	171 / 138	137 / 110
	15	Nm	2,942 / 2,942	2,942 / 2,942	2,942 / 2,805	2,942 / 2,942	2,746 / 2,206	2,285 / 1,844	1,824 / 1,471
		Kgf.m	300 / 300	300 / 300	300 / 286	300 / 300	280 / 225	233 / 188	186 / 150

MECHANICAL SPECIFICATIONS

MODEL	TORQUE (Nm / kgf . m)	ALLOWABLE THRUST [ton / kN]	STEM DIAMETER (mm) Key / Threaded	FLANGE ISO No. TAP PCD SIZE (mm)	Weight (Kg)
ITM 0180	177 / 18	7 / 68.6	35 / 40	125 F10 102 4 - M10 70	40
ITM 0450	441 / 45	12 / 118	50 / 60	175 F14 140 4 - M16 100	60
ITM 0750	735 / 75	16 / 157	60 / 72	210 F16 165 4 - M20 130	89
ITM 1800	1,765 / 180	40 / 392	95 / 110	300 F25 254 8 - M16 200	185
ITM 3000	2,942 / 300	70 / 686	115 / 130	350 F30 298 8 - M20 230	210



DIMENSIONS

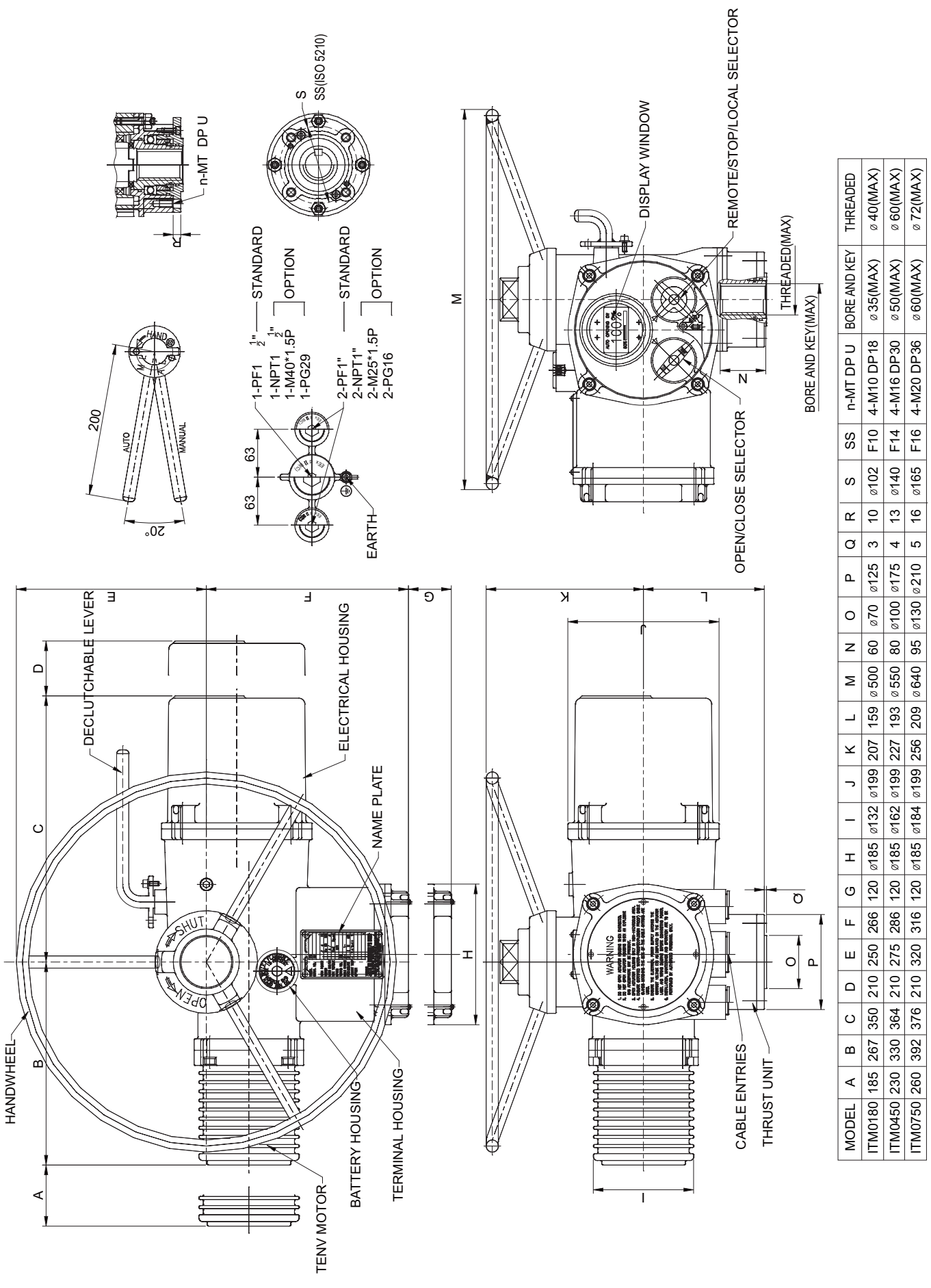

MODEL	A	B	C	D	E	F	G	H	I	J	K	L	M	N	O	P	Q	R	S	SS	n-MT DP U	BORE AND KEY	THREADED
ITM0180	185	267	350	210	250	266	120	ø185	ø132	ø199	207	159	ø 500	60	ø70	ø125	3	10	ø102	F10	4-M10 DP18	ø 35(MAX)	ø 40(MAX)
ITM0450	230	330	364	210	275	286	120	ø185	ø162	ø199	227	193	ø 550	80	ø100	ø175	4	13	ø140	F14	4-M16 DP30	ø 50(MAX)	ø 60(MAX)
ITM0750	260	392	376	210	320	316	120	ø185	ø184	ø199	256	209	ø 640	95	ø130	ø210	5	16	ø165	F16	4-M20 DP36	ø 60(MAX)	ø 72(MAX)

DIMENSIONS

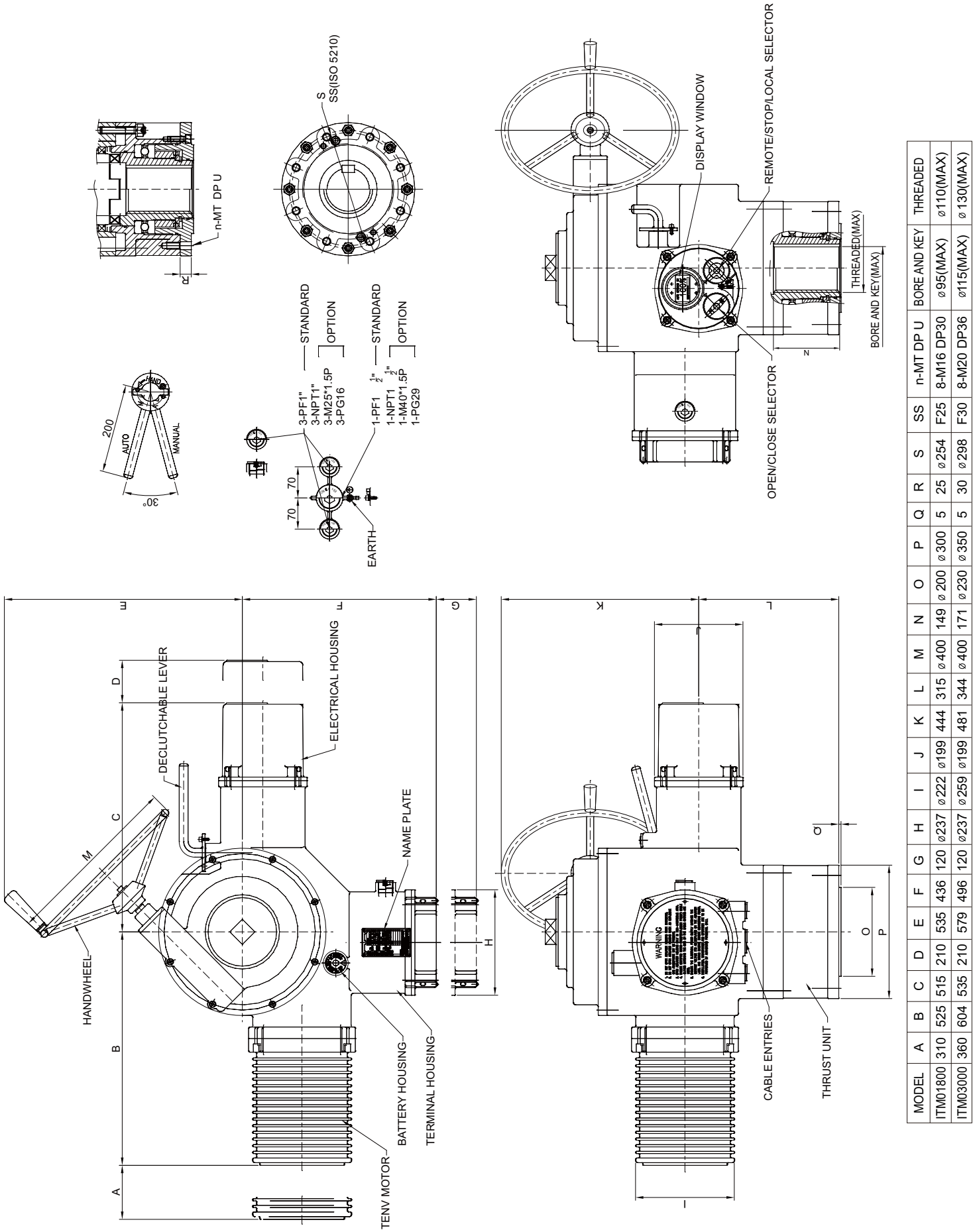

MODEL	A	B	C	D	E	F	G	H	I	J	K	L	M	N	O	P	Q	R	S	SS	n-MT DP U	BORE AND KEY	THREADED
ITM01800	310	525	515	210	535	436	120	ø237	ø222	ø199	444	315	ø400	149	ø200	ø300	5	25	ø254	F25	8-M16 DP30	ø95(MAX)	ø110(MAX)
ITM03000	360	604	535	210	579	496	120	ø237	ø259	ø199	481	344	ø400	171	ø230	ø350	5	30	ø298	F30	8-M20 DP36	ø115(MAX)	ø130(MAX)

WIRING DIAGRAM

OPTION NAME : BASIC

⏚	FGND							
1	MOTOR POWER 3PH "U"							
2	MOTOR POWER 3PH "V"							
3	MOTOR POWER 3PH "W"							
4	MOTOR TP	16	S2 : OLS*	28		40		
5	N.C*	17	FULL OPEN (LATCH, N.O* / N.C)	29		41		
6	CLS	18	S3 : CTS*	30		42		
7	CLOSE LIMIT RELAY (LATCH, N.O / N.C*)	19	CLOSE TORQUE (LATCH, N.O* / N.C)	31		43		
8	OLS	20	S4 : OTS*	32		44		
9	OPEN LIMIT RELAY (LATCH, N.O / N.C*)	21	OPEN TORQUE (LATCH, N.O* / N.C)	33		45		
10	CTS	22	INCOMING CONTROL POWER FAIL/READY, COM	34		46		
11	CLOSE TORQUE RELAY (LATCH, N.O / N.C*)	23	INCOMING CONTROL POWER OFF, FAIL	35		47		
12	OTS	24	INCOMING CONTROL POWER ON, READY	36		48	24V+	INCOMING CONTROL POWER
13	OPEN TORQUE RELAY (LATCH, N.O / N.C*)	25		37		49	24V-	DC 24V
14	S1 : CLS*	26		38		50	LIVE	INCOMING CONTROL POWER
15	FULL CLOSE (LATCH, N.O* / N.C)	27		39		51	NEUTRAL	AC 87V~264V

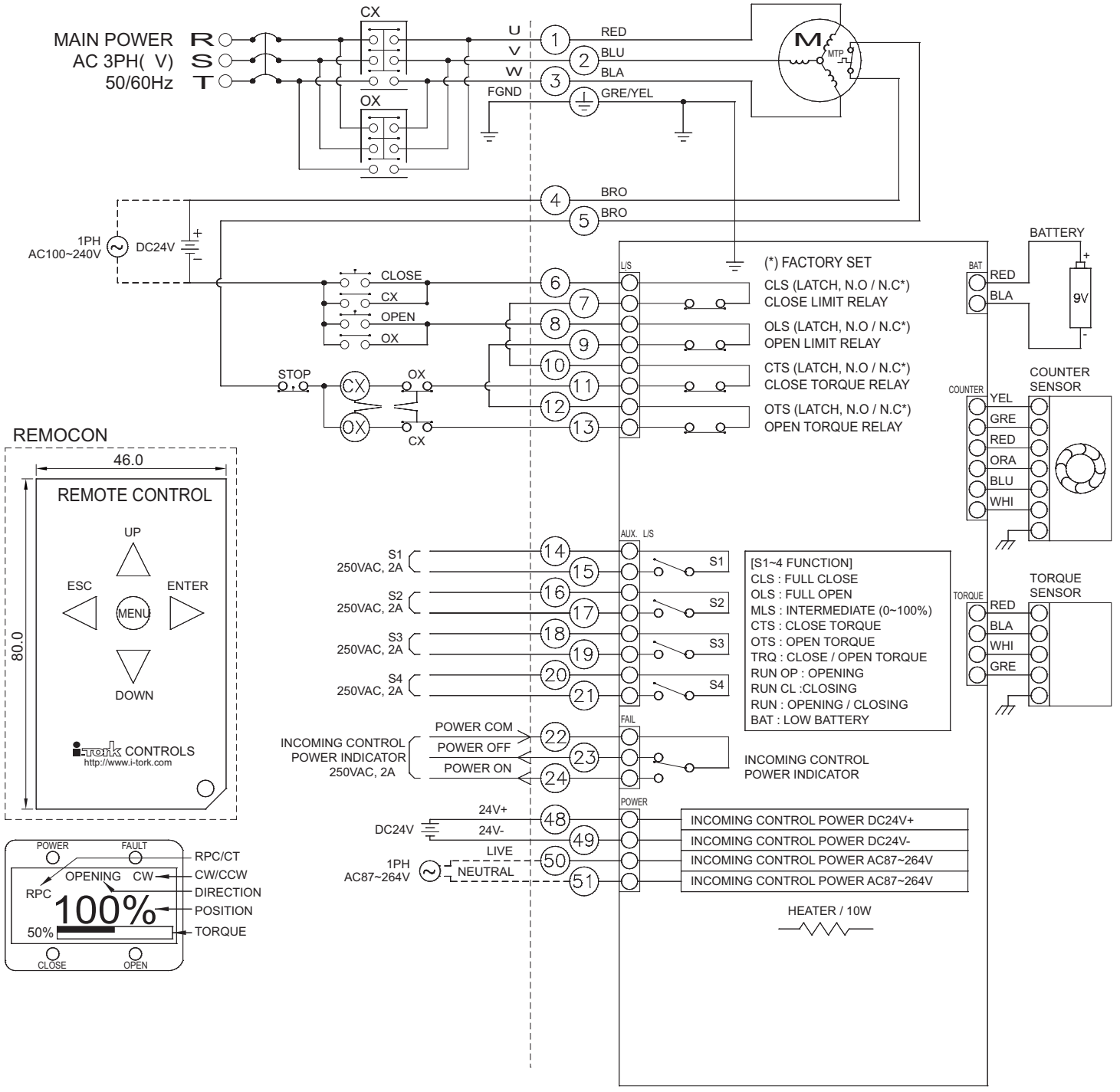

WIRING DIAGRAM

OPTION NAME : BASIC + RPC

⏚	FGND							
1	MOTOR POWER 3PH "U"							
2	MOTOR POWER 3PH "V"							
3	MOTOR POWER 3PH "W"							
4	MOTOR TP	16	S2 : OLS*	28		40	AI+ 4~20mA*/0~5V/0~10V/1~5V/2~10V	
5	N.C*	17	FULL OPEN (LATCH, N.O* / N.C)	29		41	AI- 4~20mA*/0~5V/0~10V/1~5V/2~10V	
6	CLS	18	S3 : CTS*	30		42	AO+ 4~20mA	
7	CLOSE LIMIT RELAY (LATCH, N.O / N.C*)	19	CLOSE TORQUE (LATCH, N.O* / N.C)	31		43	AO- 4~20mA	
8	OLS	20	S4 : OTS*	32		44		
9	OPEN LIMIT RELAY (LATCH, N.O / N.C*)	21	OPEN TORQUE (LATCH, N.O* / N.C)	33	CLOSE RELAY, RPC OUTPUT COMMAND	45		
10	CTS	22	INCOMING CONTROL POWER FAIL/READY, COM	34	COM, RPC OUTPUT COMMAND COMMON	46		
11	CLOSE TORQUE RELAY (LATCH, N.O / N.C*)	23	INCOMING CONTROL POWER OFF, FAIL	35	OPEN RELAY, RPC OUTPUT COMMAND	47		
12	OTS	24	INCOMING CONTROL POWER ON, READY	36		48	24V+	INCOMING CONTROL POWER
13	OPEN TORQUE RELAY (LATCH, N.O / N.C*)	25		37		49	24V-	DC 24V
14	S1 : CLS*	26		38		50	LIVE	INCOMING CONTROL POWER
15	FULL CLOSE (LATCH, N.O* / N.C)	27		39		51	NEUTRAL	AC 87V~264V

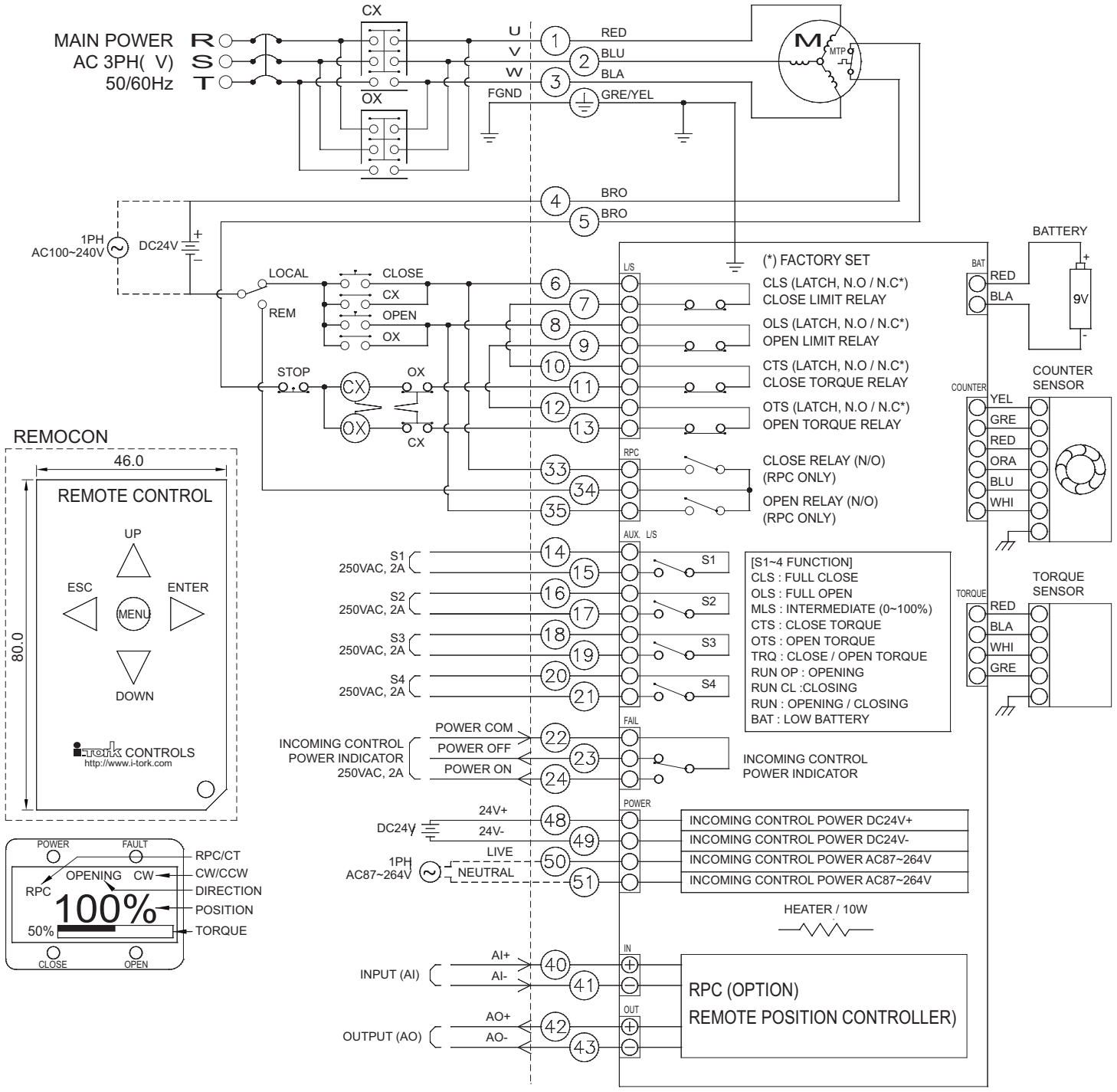

WIRING DIAGRAM

OPTION NAME : INTEGRAL

⏚	FGND						
1	3PH POWER "R"						
2	3PH POWER "S"						
3	3PH POWER "T"						
4	INTERNAL CONTROL POWER DC 24V-	16	S6 : REV*	28	STOP (OPEN) / MAINTAIN (SHUT)	40	
5	INTERNAL CONTROL POWER DC 24V+	17	*REVERSE 3PH (LATCH, N.O* / N.C)	29	OPEN	41	
6	S1 : CLS*	18	S7 : RUN CL*	30	EXTERNAL CONTROL POWER AC/DC 24V-	42	
7	FULL CLOSE (LATCH, N.O* / N.C)	19	*CLOSING (LATCH, N.O* / N.C)	31	EXTERNAL CONTROL POWER AC 110V/220V	43	
8	S2 : OLS*	20	S8 : RUN OP*	32		44	
9	FULL OPEN (LATCH, N.O* / N.C)	21	*OPENING (LATCH, N.O* / N.C)	33	ESD	45	
10	S3 : CTS*	22	3PH POWER FAIL/READY, COM	34		46	
11	CLOSE TORQUE (LATCH, N.O* / N.C)	23	3PH POWER OFF, FAULT	35		47	
12	S4 : OTS*	24	3PH POWER ON, READY	36		48	
13	OPEN TORQUE (LATCH, N.O* / N.C)	25		37		49	
14	S5 : REMOTE*	26	MODULATION (RPC/PROFIBUS/CANopen/Etc.)	38		50	
15	*REMOTE MODE (LATCH, N.O* / N.C)	27	CLOSE	39		51	

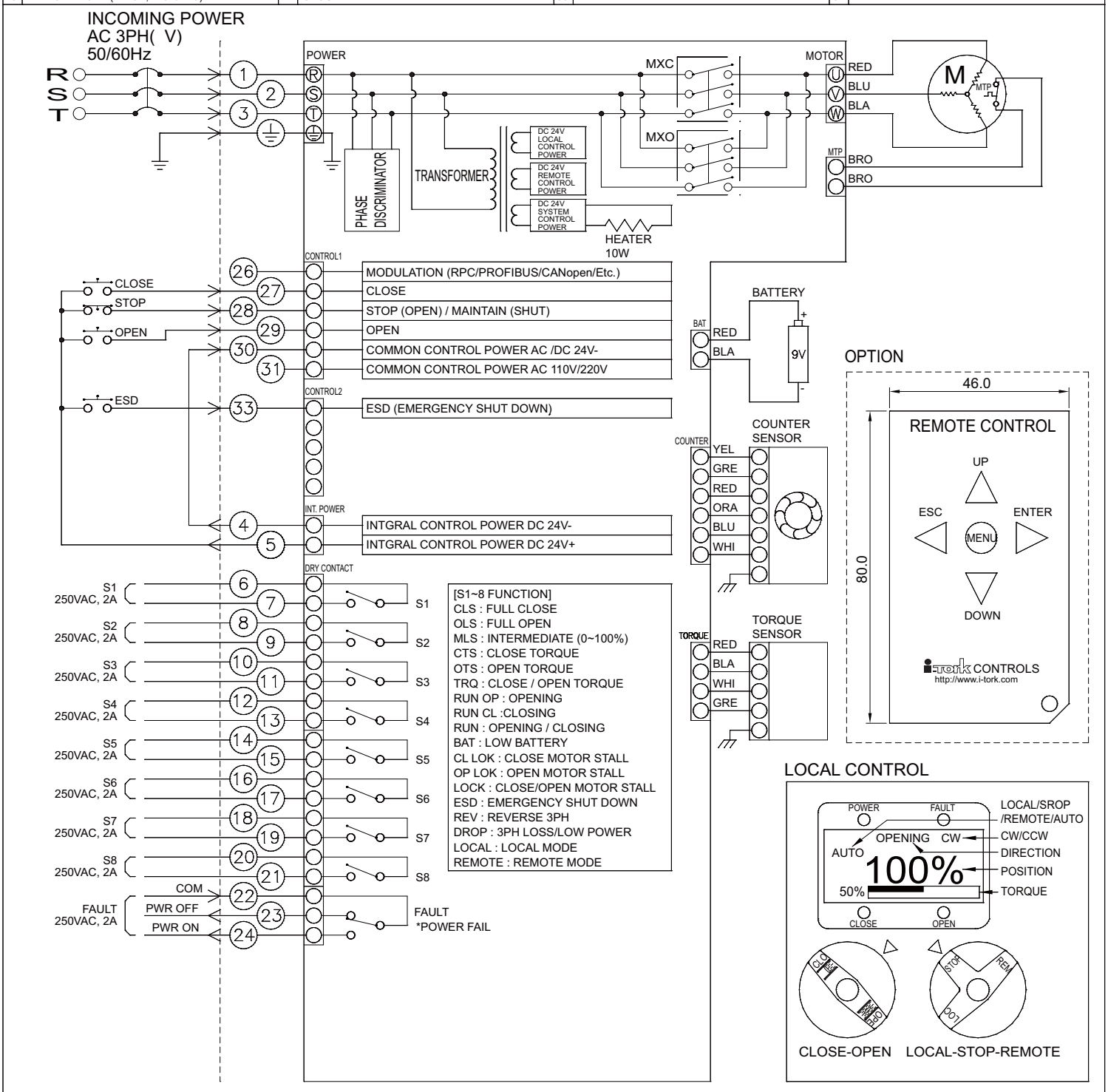

WIRING DIAGRAM

OPTION NAME : INTEGRAL + RPC

⏚	FGND						
1	3PH POWER "R"						
2	3PH POWER "S"						
3	3PH POWER "T"						
4	INTERNAL CONTROL POWER DC 24V-	16	S6 : REV*	28	STOP (OPEN) / MAINTAIN (SHUT)	40	AI+ 4~20mA*/0~5V/0~10V/1~5V/2~10V
5	INTERNAL CONTROL POWER DC 24V+	17	*REVERSE 3PH (LATCH, N.O* / N.C)	29	OPEN	41	AI- 4~20mA*/0~5V/0~10V/1~5V/2~10V
6	S1 : CLS*	18	S7 : RUN CL*	30	EXTERNAL CONTROL POWER AC/DC 24V-	42	AO+ 4~20mA
7	FULL CLOSE (LATCH, N.O* / N.C)	19	*CLOSING (LATCH, N.O* / N.C)	31	EXTERNAL CONTROL POWER AC 110V/220V	43	AO- 4~20mA
8	S2 : OLS*	20	S8 : RUN OP*	32		44	
9	FULL OPEN (LATCH, N.O* / N.C)	21	*OPENING (LATCH, N.O* / N.C)	33	ESD	45	
10	S3 : CTS*	22	3PH POWER FAIL/READY, COM	34		46	
11	CLOSE TORQUE (LATCH, N.O* / N.C)	23	3PH POWER OFF, FAULT	35		47	
12	S4 : OTS*	24	3PH POWER ON, READY	36		48	
13	OPEN TORQUE (LATCH, N.O* / N.C)	25		37		49	
14	S5 : REMOTE*	26	MODULATION (RPC/PROFIBUS/CANopen/Etc.)	38		50	
15	*REMOTE MODE (LATCH, N.O* / N.C)	27	CLOSE	39		51	

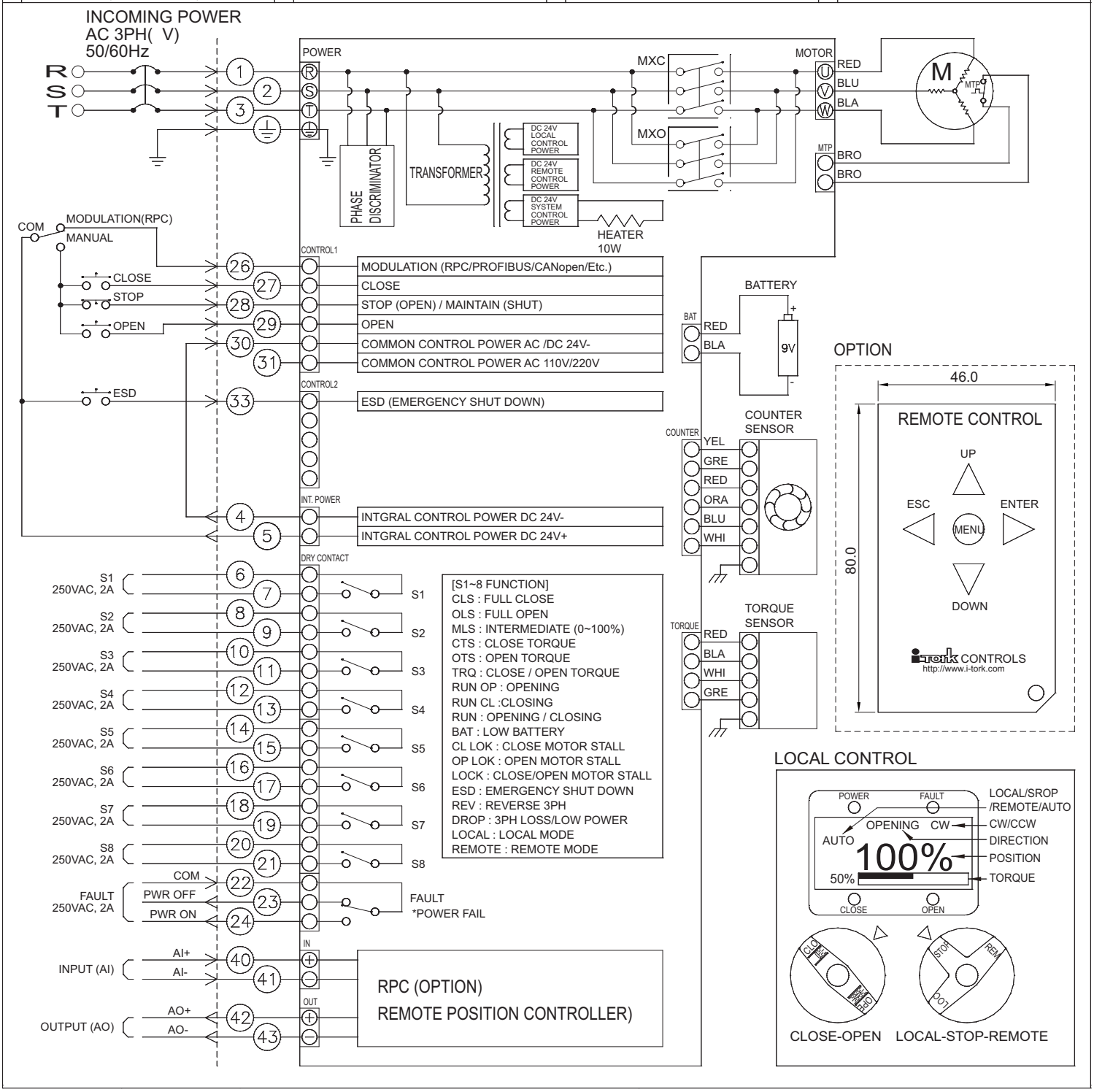

MULTI-TURN ACTUATOR ITM SERIES



* The details of this catalog are subject to change without prior notification.

i-TORK® CONTROLS Co., Ltd.

Website : http://www.i-tork.com

© I-TORK® Controls Co., Ltd. All rights reserved. ITM-CA-1603