ITS Series *Position Monitoring Switch*





First in Automation...



INTERNATIONAL
BS EN ISO 9001:2000
UKAS QUALITY MANAGEMENT



ITS series position monitoring switch boxes are primarily a rotary position indication device designed to integrate valve and NAMUR rotary pneumatic actuator with a variety of mounting options, internal switches or sensors and configurations.

ITS 100 series

ITS 100 series are specially designed suitable for small size pneumatic actuator and valves to reduce installation space, but provides high performance by equipping a variety of switches and sensors.

SPECIFICATION	Standard	Option
Enclosure	Weather proof IP67, O-ring sealed	
Outside coating	Epoxy-Polyester inside and outside against corrosion	Nylon Coating Special color Coating
Ambient temperature	-20°C~+80°C	
Cable entries	2 - PT1/2, other standard threads	(NPT1/2, PF1/2, M20x1.5 and PG13.5)
Terminal block	8 nos of terminal strips (6 for switches, 2 for solenoid valve power)	
Position indicator	Dome type 0°~90°	Others(3 way L-port, T-port)
Mounting bracket	Stainless steel acc. to VDI/VDE3845, NAMUR, SS1, SS2 as standard	SS3, MT1 as option
Switches(Sensors)	2-SPDT mechanical switch(Form C) as standard	Proximity sensors(P & F, Autonics), Others

DIMENSION

ITS 100 series

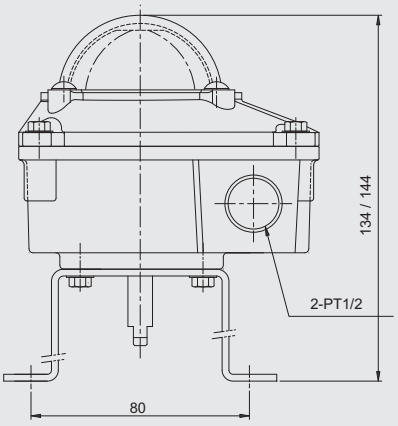

Front view

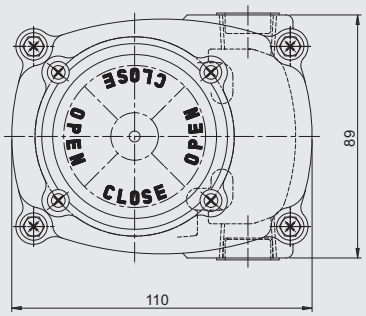

Top view

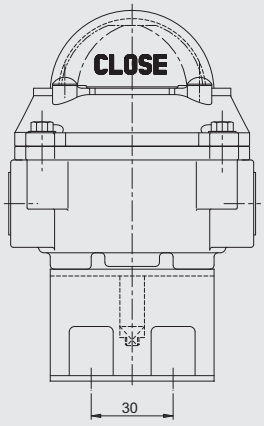

Side view

Rigid and compact design constructed from aluminum alloy die-casting capable of operating even in arduous conditions

ITS 300 series

ITS 300 series are designed suitable for valve and actuators in hazardous area application, having compact but robust construction conforms to IEC60079-0:2007, IEC60079-1:2007, EN60079-0:2006 and EN60079-0:2006, also suitable in Zone 1 and 2, and ingress protection IP67 Standard aluminum housing provides reliable explosion proof performance.



SPECIFICATION	Standard	Option
Enclosure	Explosion proof Ex d IIC T6 Gb, IP67, O-ring sealed	IP 68
Outside coating	Epoxy-Polyester outside against corrosion	Nylon Coating Special color Coating
Ambient temperature	-20°C~+80°C (Explosion proof type: -20°C~+60°C)	Higher(~100°C) and lower (-40°C~) temperature
Cable entries	2 - PF3/4, other standard threads	(NPT3/4, M20x1.5, M25x1.5)
Terminal block	8 nos of terminal strips (6 for switches, 2 for solenoid valve power)	
Position indicator	Dome type 0°~90°	Others(3 way L-port, T-port)
Mounting bracket	Stainless steel acc. to VDI/VDE3845 NAMUR, SS1, SS2 as standard	SS3, MT1 as option
Switches(Sensors)	2-SPDT mechanical switch(Form C)	DPDT Switches Proximity sensors(P & F, Autonics) Magnetic sensors Position transmitter (output 0~1Kohm, 4-20mA DC)

DIMENSION

ITS 300 series

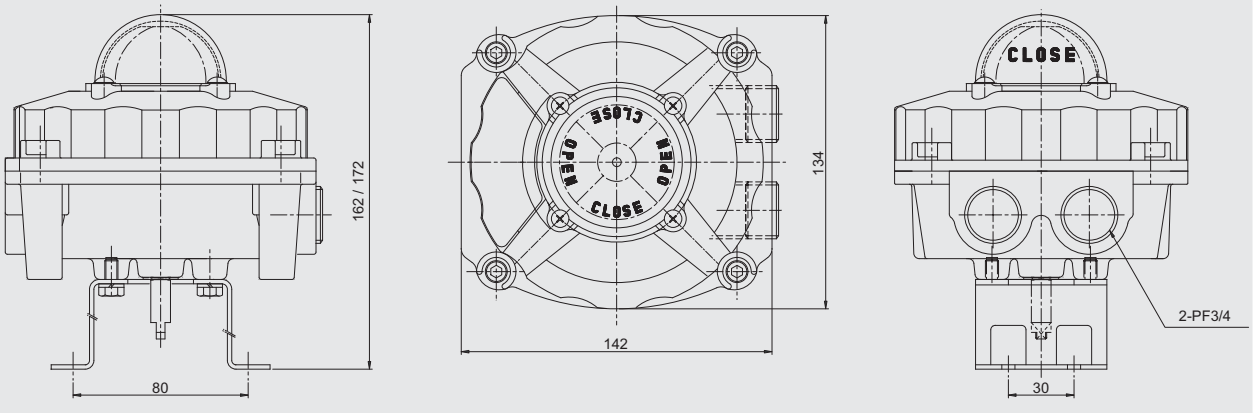

Front view | Top view | Side view

Dome position indicator constructed from high impact resistance poly-carbonate material which offers instant visual recognition of valve or actautor position up to 50 meters distance.



ITS 500 series

Speical stainless steel housing(316L or Duplex) provide very high protection performance against extremely corrosive environmental condition.
Suitable for off-shore application.
Other specification is same with ITS 300 series except for enclosure & coating.

CONSTRUCTION MATERIAL

Housing	Low copper aluminum die-casting
Coating	Epoxy-Polyester inside/outside(100 series) Chromated /Epoxy-Polyester(300 series) No painting on stainless steel housing
Sealing	NBR O-rings on each interface (Dome indicator, Lower/Upper housing, Shaft)
Cams	Poly-carbonate
Bushings	Bronze
Shaft	AISI303 Stainless steel
Earth Lug	Stainless steel
Bolts	All in stainless steel
Mounting bracket	Plate steel(ST series) Stainless steel(SS series and MT1)

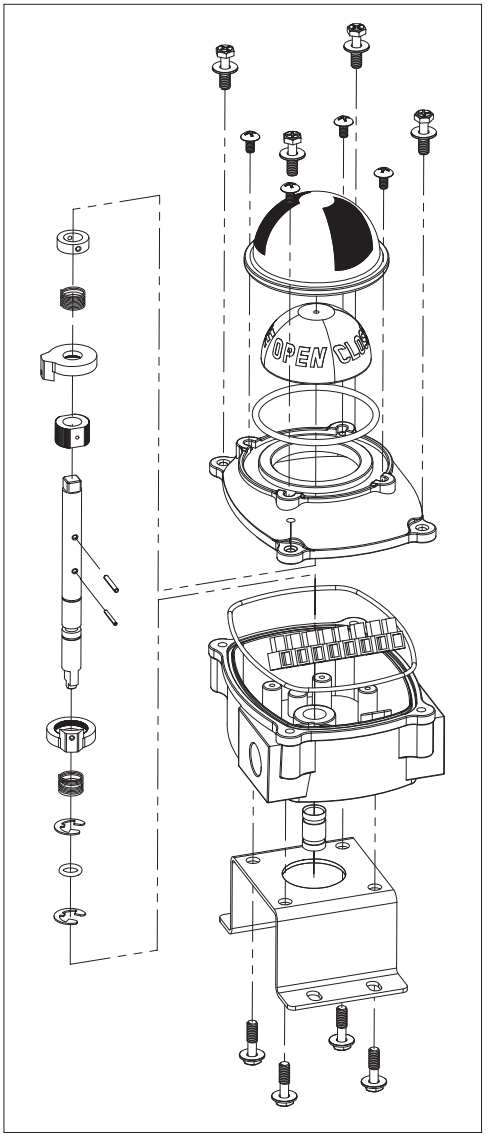

Easy set cam

Easy and precise cam set without setting tool
Red cam for close, Green cam for open



Standard Cam



Cam with Sensing Target



Terminal block and strips

Socket type terminal strip with screws
Max. 2.5mm^2, 26A at 30°C(approved by UL, CSA)

Visual position indicator

Directly engaged with driving shaft to provide continuous position
High strength, Chemical resistance and transparent poly-carbonate
High visibility and reliability
Red for close, Yellow for open(Red for close, Green for open as option)

Standard





L-port



T-port

Mechanical switches

2-SPDT switches

Rating : 16A 1/2HP 125/250V AC,
0.6A 125V DC
0.3A 250V DC
approved by UL, CSA



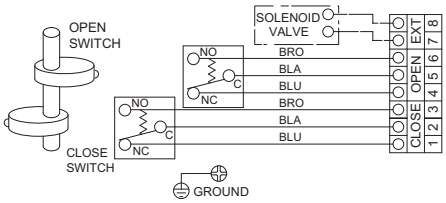

4-SPDT switches

Rating : 5A 125 V AC LT130
0.6A 125V DC to 16A 250V AC
approved by UL, CSA



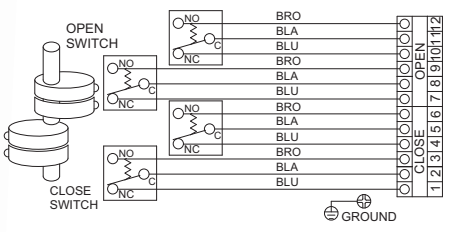

Mechanical DPDT switches

Rating : 10A 125 or 250V AC
2A 480V AC
1/8HP 125V AC
0.25HP 250V AC
0.5A 125V DC
0.25A 250V DC
approved by UL, CSA

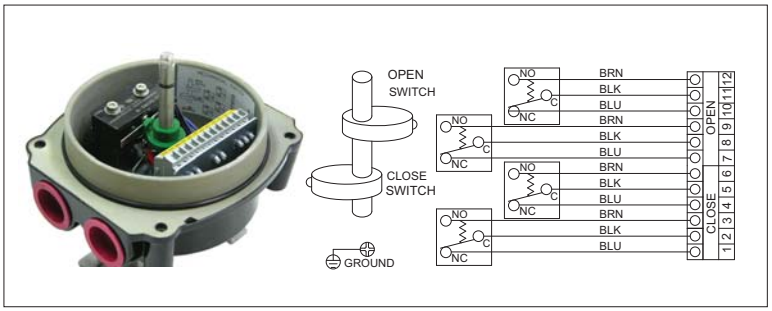

Proximity Sensors

Autonics sensors

PSN17-5DNU
PSN17-5DPU
Voltage rating : 10~30V DC
Sensing distance : 5mm
Ambient temperature : -25°C ~+70°C

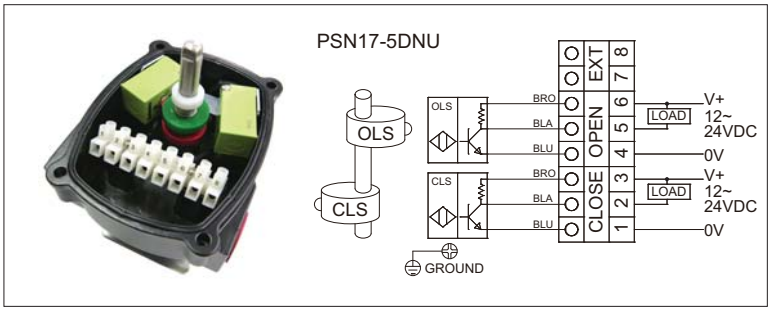

P & F sensors

NJ2-V3-N(Intrinsic safe, two wire)
Voltage rating : 8V DC
Sensing distance : 2mm
Ambient temperature : -25°C ~+100° C

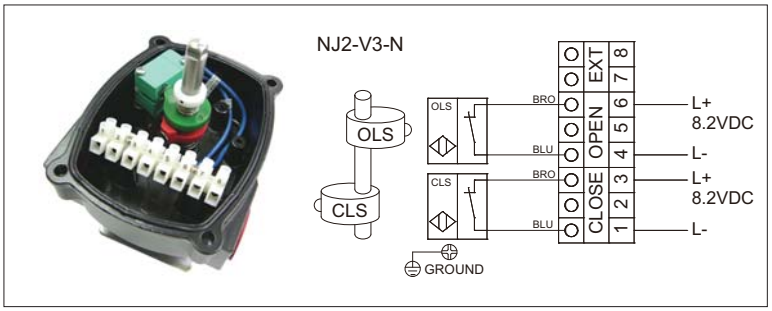

NJ4-12GK-SN
Voltage rating : 8V DC
Sensing distance : 4mm
Ambient temperature : -50°C ~+100°C

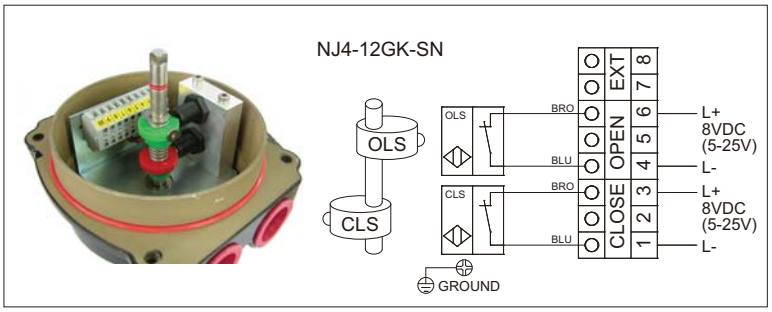

Monas I-sensors

SPDT. Form C (Normally Open)
Contacts : Tungsten
Sensing distance : 2mm
Rating : 3 amps/24 V AC
2 amps/24 V DC
0.5 amps/240 V AC

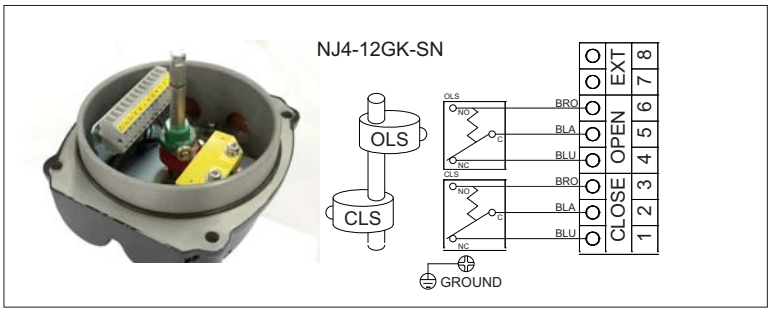

Position transmitter

Providing 4-20mA DC(or 0~1Kohm) output signal as feedback, 15~28VDC loop power(24V DC input power)
Load impedance : 0~600 Ohm, Max output : 35mA DC
Adjustment : Zero and span





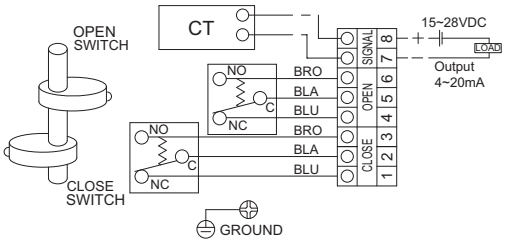

Mounting bracket(Acc. to VDI/VDE3845)

SS1



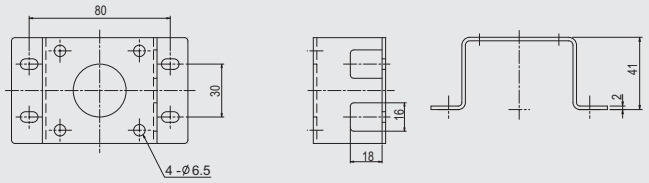

SS2



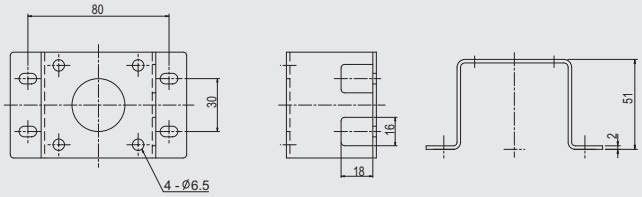

SS3



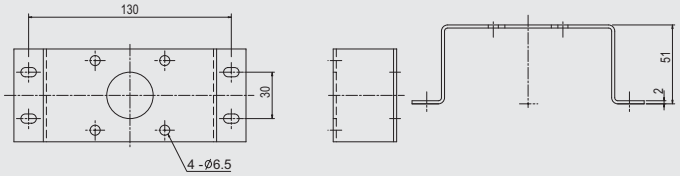

MT1



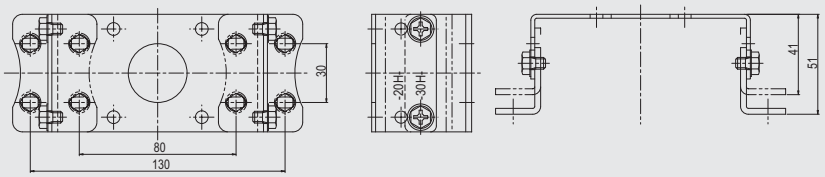

Standard bracket provided together with switch box(included)
SS1 30 x 80 x 20(H)
SS2 30 x 80 x 30(H)

Optional bracket provided with extra cost
SS3 30 x 130 x 30(H)
MT1 30 x 80 x 20(H), 30 x 80 x 30(H)
30 x 130 x 20(H), 30 x 130 x 30(H)

Others as option

Model number Legend

ITS	1	0	0
	1: Weather proof	0: Mechanical switches	0 : 2 - SPDT
			1 : 3 - SPDT
	3: Explosion proof		2 : 4 - SPDT
			3 : 2 - SPST
	5: Special material housing (316L, Duplex)		4 : 2 - DPDT
			5 : 2 - SPDT + output(0~1Kohm)
			6 : 2 - SPDT + output(4-20mA)
		1 : Proximity sensors	0 : Autonics (PSN17-5DNU-NPN etc)
			1 : P & F (NJ2-V3-N)
			M: Monas I-sensor
			S: Other type sensors

- Model numbers in Green are applicaboe to ITS100, 300 and 500 series
- Model numbers in Red are applicable to ITS300 and 500 series

I-TORK® CONTROLS Co., Ltd.

Website : http://www.i-tork.com

Technical details are subject to change without prior notification, without our responsibility.

© I-TORK® Controls Co., Ltd. All rights reserved. ITS-CA-1409