TRIMTECK®
OPTIMUX®

DX Series

OpDX™ Butterfly Control Valve



OpDX
Control Valve

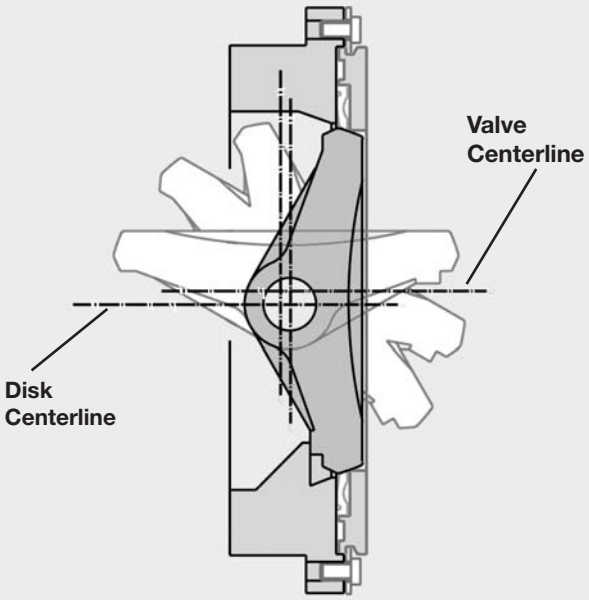

Figure 1: Eccentric-Cammed Disk Rotation

The high performance OpDX, rotary valve uses a pressure assisted seating concept, to achieve a bi-directional bubble-tight shutoff while maintaining low breakout torque, specially at every first opening actuation, at both high and low pressure drops. It is available in ANSI Classes 150 thru 2500 and in sizes from 2 to 30-inch. OpDX is available in carbon steel, stainless steel and other alloys. The seat design assures low breakout torque by utilizing the pressure drop across the valve to aid the seating process. Combined with a high-thrust cylinder actuator and eccentric-cammed disk, it is possible to achieve a high performance throttling – even under large pressure drops in the valve.

OpDX's Eccentric Cammed Disk

A double offset has been designed into the disk to lift it out of the seat immediately upon opening actuation, this avoids wear on the seat and disk, by reducing leakage and parts replacement. It also improves throttling by eliminating friction.

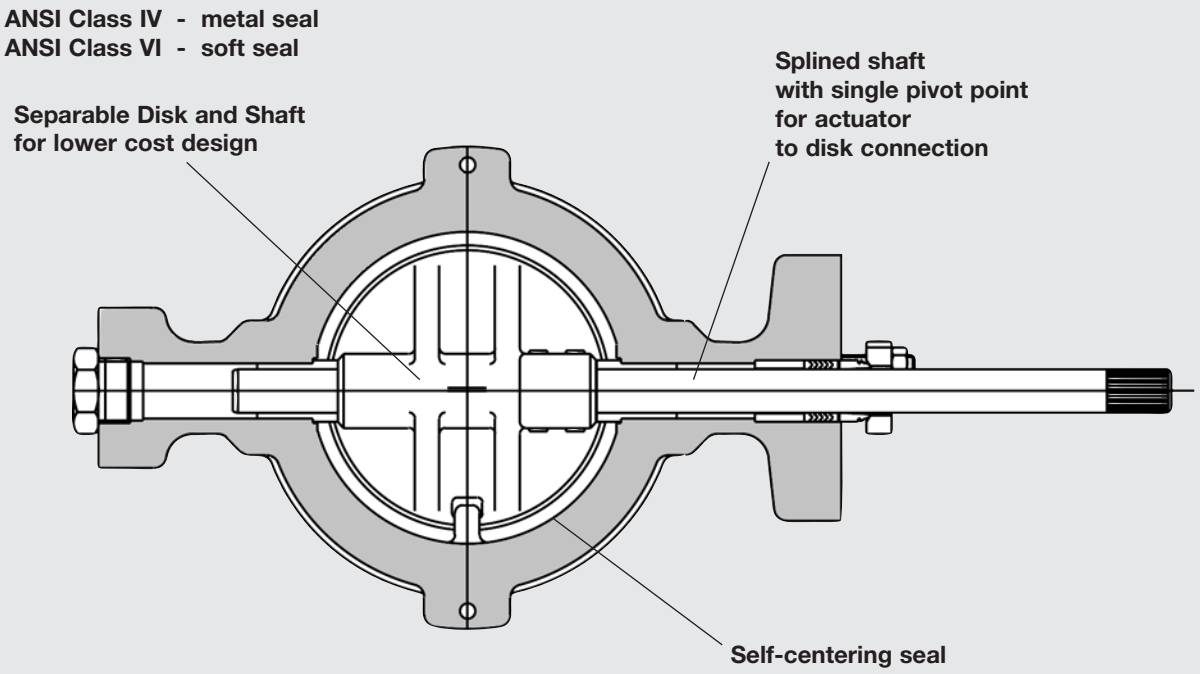

Figure 2: Body subassembly

OpDX
Seating Principles

The OpDX seating concepts utilize the pressure drop across the valve to force the soft seat to bubble-tight shutoff in either flow direction, including alternating flow applications. It is done in such a way that seating capacity is increased, as differential pressure is increased. The soft seats achieve ANSI Class VI shutoff.

Table I: Seat Leakage

Metal Seat`	ANSI Class IV
Soft Seat	ANSI Class VI
Flow Seat	2% of Rated C_V
Double Seat	ANSI Class IV

Figure 3
As pressure enters the seat cavity formed between the seat and the shaft downstream, the seat jams into the disk, causing it to seat tighter against the disk.

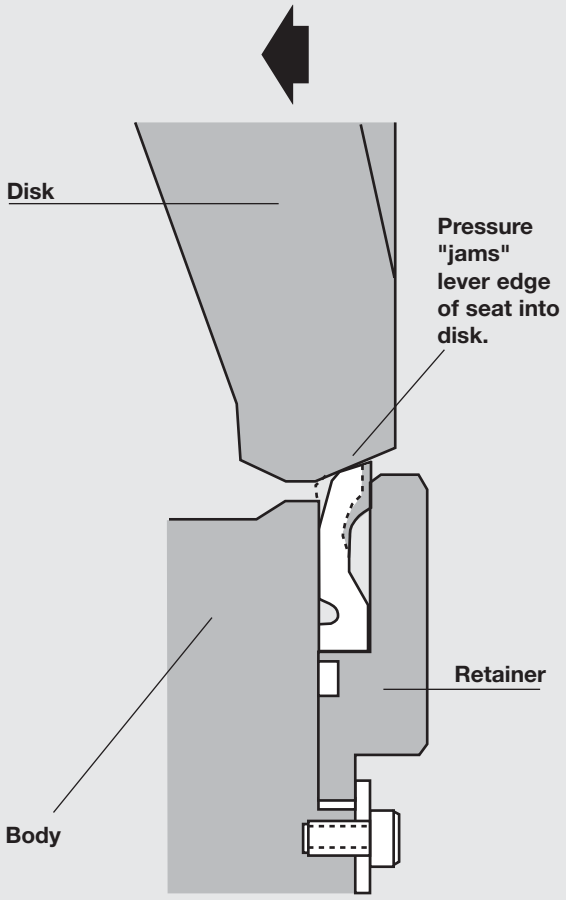

Figure 3
Seating Principles
Soft seat - Flow Upstream

Figure 4
As pressure enters the seat cavity formed between the seat with the shaft upstream, the seat tends to toggle or flatten out, causing it to seal tighter against the disk.

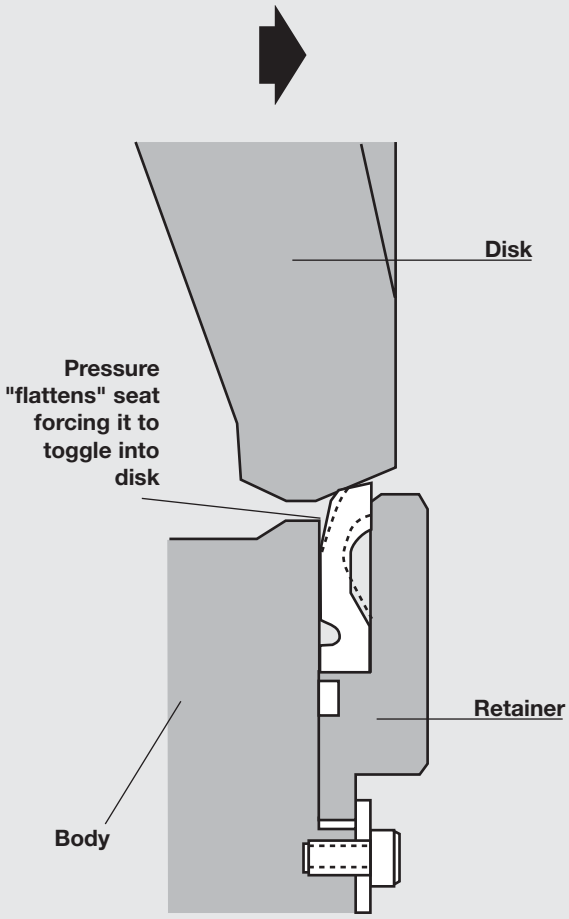

Figure 4
Seating Principles
Soft Seat - Flow Downstream

OpDX
Flow

Flow Direction

OpDX allows two different operating directions: shaft upstream or shaft downstream, depending on service conditions. With the shaft downstream, the flow tends to open the valve, and with the shaft upstream the flow tends to close the valve.
Whenever possible it is recommended that OpDX valves be installed with the shaft downstream so as to result in a lower dynamic torque when the valve is open. On liquid service, with the shaft installed upstream, the forces produced from liquid inertia can cause system and valve serious problems such as waterhammer or flow instability as the valve closes.
For gas service, if the flow must assist fail-open applications, the valve must be installed with the shaft downstream and with the shaft upstream if flow must assist fail-closed applications.
However shaft installation must be always upstream if the flow must assist fail-closed applications and to insure the valve disk moves to the closed position.
For liquid services, all the valves must be installed with the shaft downstream whatever fail-safe application is required.

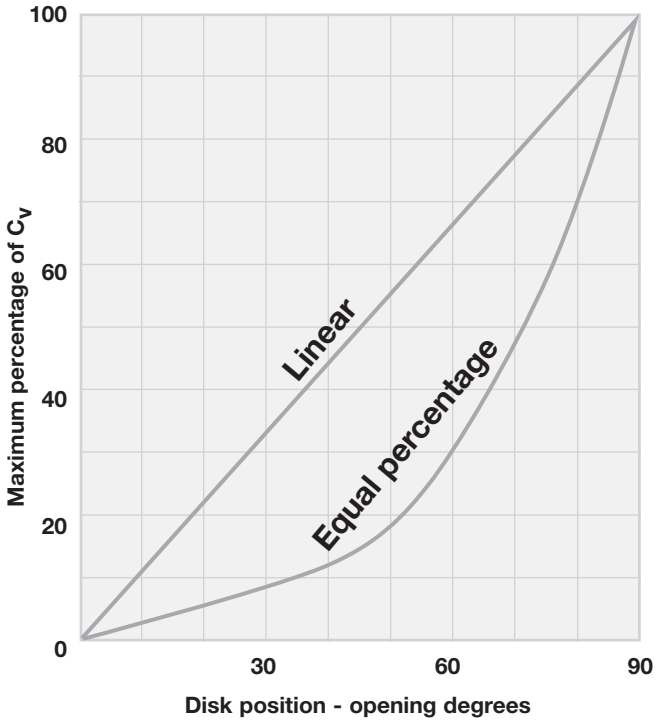

Figure 5: Flow Characteristics

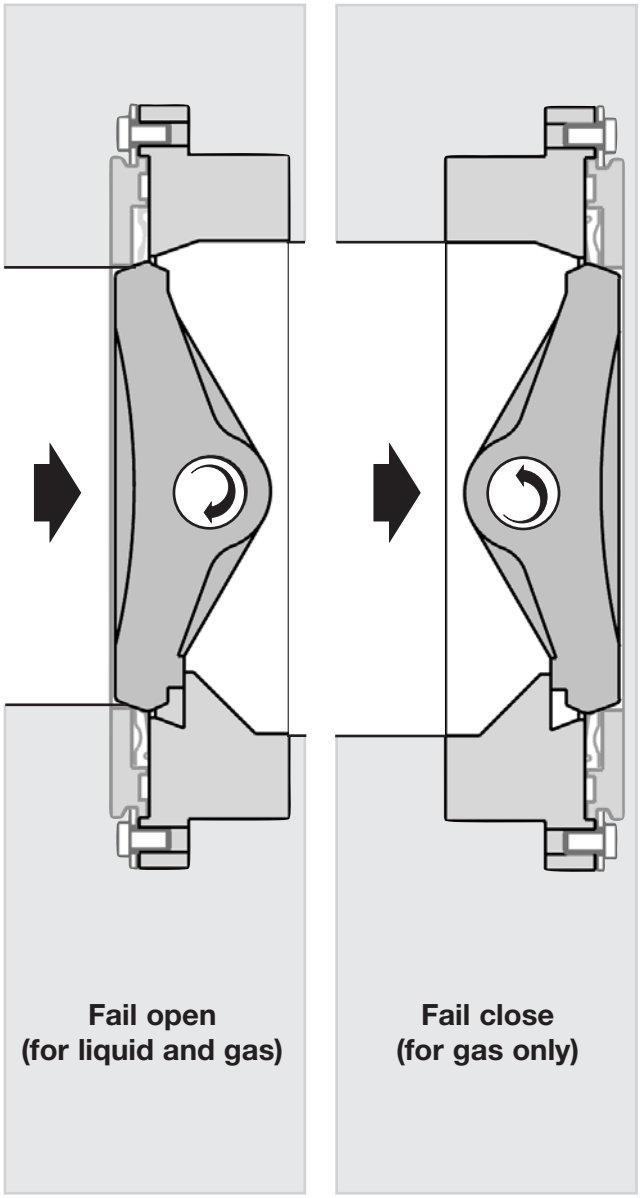

Figure 6: Flow direction

Flow Characteristic

The inherent characteristic of OpDX is a modified parabolic characteristic curve. Other characteristics are available by simply replacing the positioner cam to obtain the proper characteristic curve required.
Other cams for flow characteristics such as inherent linear and equal-percentage as well as a linear rate between signal and shaft rotation are also available.

OpDX
Disk, Seats

Disk
OpDX body and disk assembly was designed to ensure a wide range of flow capacity. The concave profile on one side of the disk allows for an increased flow capacity while reinforcement ribs on the other side prevents the disk from flection effects specially under high differential pressures. The disk is also provided with a disk-stop to protect the seat from damage due to overstroking.

Soft Seat
OpDX soft seat maintains a properly designed configuration that provides a bubble-tight shutoff equal to ANSI Class IV to be achieved.

Dual Seat
OpDX dual seats incorporates both soft seat and the flexible lip metal seat for added protection.

Metal Seat
Metal seats are used for applications involving higher temperatures than those permitted by the soft seat. The design incorporates a highly flexible lip which assures full circle contact between the seat and disk when the valve is closed.
Because of lip flexibility, breakout torque for the metal seat is the same or less than soft seat breakout torque. OpDX metal seat assures a tight shutoff above that of ANSI Class IV.

Flow Direction
The tight shutoff system allows OpDX to flow either shaft downstream or shaft upstream, depending on service conditions.

Seat Configurations

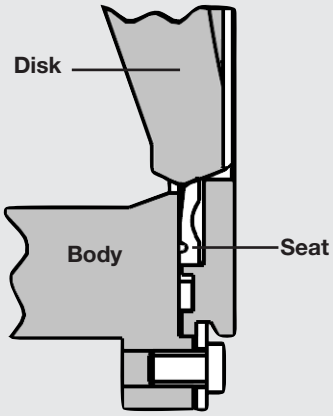

Figure 7: Soft Seat

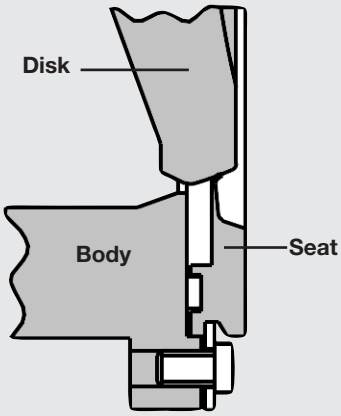

Figure 8: Metal Seat

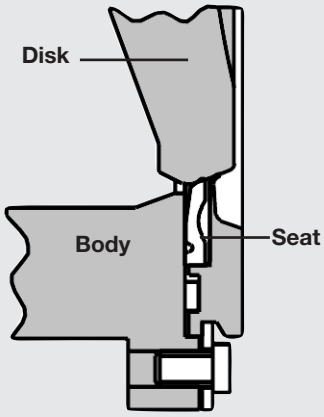

Figure 9: Dual Seat

OpDX
Features and Advantages

Soft Seat
- Bubble-tight shutoff , according to ANSI Class VI
- Low breakout torque assures accurate throttling, even close to the seat
- Flow -free profile
- Easy removal

Metal Seat
- Tight shutoff superior to ANSI Class IV

Eccentric-cammed disk
- Disk pulls out of seat immediately, preventing seat wear
- Accurate throttling due to disk profile when rotating into the seat

Single pivot-point, splined shaft
- Lost motion minimized between shaft and actuator

Bolted seat retainer
- Uninterrupted gasket surfaces allows for a wide variety of gasketing

Non-selective disk and shaft
- Easy maintenance
- Reduced cost – replace part needed, not entire assembly

Flangeless body (wafer)
- Rugged and lightweight for easy handling and maintenance; one body (wafer) serves ANSI Classes 150, 300 and 600 in sizes 2, 3, 4, 6 and 8 inches.
- Industry standard MSS SP-67 permits shorter flange bolting than ball or cammed valves, increasing safety and reducing possibility of leakage.

Flow capacity
- Capacity greater than globe, plug and cammed control valves.

Concave disk
- Increased flow capacity

Disk stop in the body
- Prevents damage to seat due to overstroking
- Permits in-line disk relocation during maintenance

Wide variety of packing configurations
- Purged bonnet and lubricator options

Fully enclosed, air plugged transfer case
- Extra safety
- Prevents environment corrosion to actuator parts
- Disk position indicator mounted on the transfer case

Piston and cylinder actuator
- High thrust for high-performance throttling in extreme pressure drops
- Compact and lightweight for easier servicing and maintenance
- Fully interchangeable with rotary valves actuator
- Actuator air pressures allowable up to 150 psi

Wide interchangeability
- Spare parts stocking requirements minimized
- Inventory costs reduced
- Many parts of other Optimux products interchangeable with OpDX

Available in a variety of materials
- Carbon steel, stainless steel and other alloys

Seat interchangeability

Metal or Teflon seats easily installed

Spool-type four-way position
- High performance with double switch
- P/P and I/P convertible
- Calibration and maintenance easy due to fewer parts

The combined features designed into OpDX create a valve measurably superior to all other rotary valves. The information and specification contained in the following pages are provided for comparison.

OpTK
Actuator

RA Piston Cylinder Actuators

Optimux's Series RA Piston-Cylinder-Rotary-Actuators are an excellent actuation choice to obtain maximum performance of our **OpDX** eccentric plug control valves. The Optimux Series RA piston cylinder rotary actuators with fail-safe spring combine high torques with pneumatic stiffness which together deliver excellent throttling characteristics. The Series RA compared to regular spring-diaphragm actuators, are lightweight, compact, efficient and in general, they take a smaller foot-print for installation in pipelines, they are simply, one of the best choices in actuation systems for rotary control valves.

The Series RA piston cylinder actuators are offered as our standard offer for all of our Rotary valves: Series XL and Series VB.

The Optimux Series RA piston cylinder actuator was designed to work with supply pressures of up to 150 psi (10.3 bars), which significantly increases torque capacity. The Series RA performance and reliability in the field has no par, as it has proven life service above one million cycles.

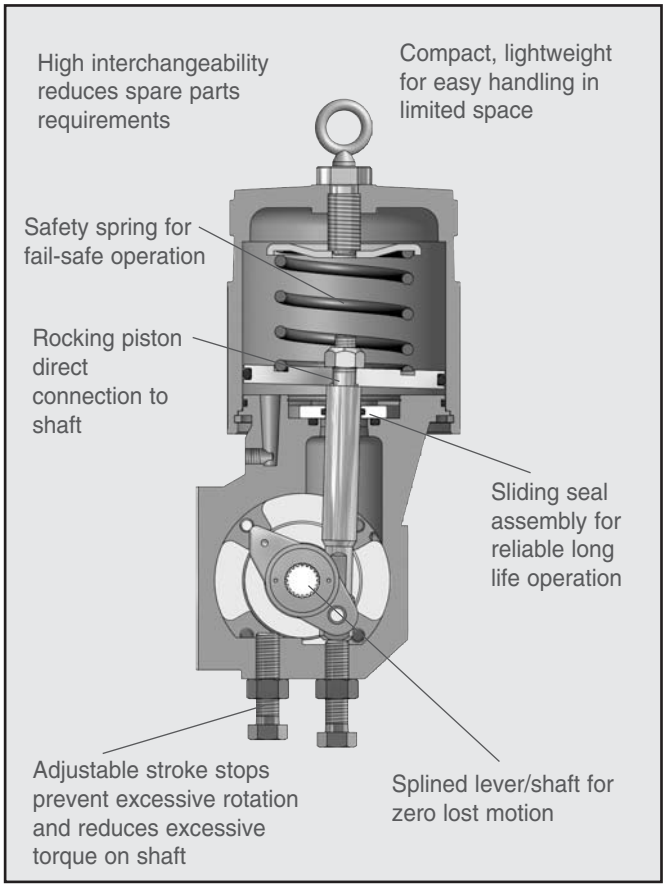

Figure 10: RA Rotary Actuator

The pneumatic stiffness achieved by the Series RA assures excellent throttling and control characteristics specially in near closing control positions.

Table II: Rotary Actuator Specifications

Type	Double-acting piston and cylinder with fail-safe spring
Sizes	25, 50
Action	Air-to-open Air-to-close Last position Field reversible
Operating Pressure	Max 150 psig Max 10,3 bars
Stroking Speed	≤ 1 second
*Temperature Range	-40˚ to 350˚F (-40˚ to 175˚ C)
Auxiliary Handwheels	Declutchable side-mounted handwheel Lever-gear operated handwheel Lever operator
Positioners	Digital HPP-3000 Digital HPP-3500

Table III: Construction Materials

Yoke	Ductile iron
Transfer Case	Anodized aluminum
Splined Lever Arm	Nickel-plated ductile iron
Stem	UNS S 41600 Stainless Steel
Bearings	Filament wound fiberglass with Teflon liner
Sliding Seal	Delrin, aluminum
Retaining Ring	Cadmium plated steel
Piston	Anodized Aluminum
Cylinder	Anodized Aluminum
O-Ring*	Buna-N (standard)
Actuator spring	Coated steel (rust proof)
Spring button	Cadmium-plated steel

* Ambient temperatures greater than 180˚ F (82˚ C) require Viton O-rings. Ambient temperatures below -40˚ F (-40˚C) require fluorosilicone O-rings.

OpTK
Rotary Actuators, Features and Characteristics

RPA Rack and Pinion Actuators

Optimux's Series RPA represent an excellent alternative to our RA Piston-Cylinder Series for rotary valves applications. As with the RA Series the RPA actuators are compact, allow for field reversibility, provide adequate torque for most standard applications and are easy to maintain. RPA actuators are designed for extremely long cycle life when utilized in normal loading applications. The RPA actuators will take service temperatures of -10º to 275º F (-23º to 135º C).

The Series RPA actuators are also offered for all our rotary valves: Series XL and Series VB.

Table IV: Double Acting Torque Values (in. Lbs)

PSI	40	60	80	100	120
RPA052	263	395	526	658	789
RPA148	740	1,109	1,479	1,849	2,219
RPA222	1,109	1,664	2,218	2,773	3,327
RPA470	2,071	3,106	4,142	5,177	6,213
RPA900	4,550	6,825	9,100	11,375	13,650

* Other model numbers and torque options are also available

Optimux® HPP4000 Smart Valve Positioners

Our new HPP4000 brings to the market all the field proven attributes of our former HPP3000 plus all the additional features our users have requested for the past few years: LCD Display, 4-20mA feedback signal, HART® communication protocol and Auxiliary Limit Switches, all of these within our legendary and well proven robust enclosure capable of sustaining the most rigorous industrial plant conditions.

But this is not all, the HPP4000 was designed to accurately position your control valve and to operate it efficiently at the lowest possible air consumption (LPM) bellow 3 LPM @ 100 psi.

Optimux® HPP4500 Smart Valve Positioners

Our new HPP4500 microprocessor equipped, current-to-pneumatic digital positioner is a reliable, accurate and robust positioner which offers as a standard many features and technical characteristics traditionally offered as options by other digital positioner's manufacturers.

The HPP4500 offers as a standard, Hart® communication, 4-20mA Feedback Signal and a LCD display.



Figure 11: RPA Rack and Pinion Actuator

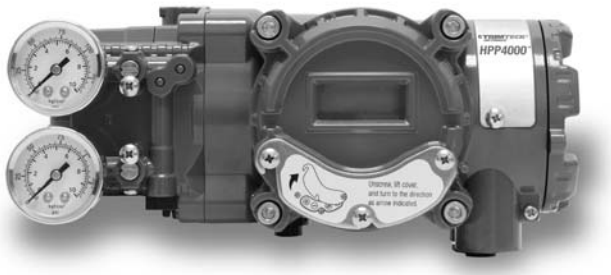

Figure 12: HPP4000 Digital Series



Figure 13: HPP4500 Digital Series

OpTK
Packings

The **OpDX** rotary valve is built with a large packing box which gives a longer service life to the packing assembly. The **OpDX** Packing box design allows for the use of a large number of packing system options, and fully complies with the most demanding fugitive emission control regulations in modern industrial processes.

Standard Packing

The **OpDX** standard packing set is composed by PTFE "V" rings, Figures 14A and 14B. The PTFE "V" rings are the most used packing system since their introduction, providing exceptional tight sealing. They provide a very low friction coefficient, good mechanical resistance and excellent resistance to corrosion. The PTFE "V" rings are the most common application choice for gasketing material.

The PTFE "V" rings are used within temperature ranges of -150º to 450°F (-101 to 232° C). High Temperature Packing The **OpDX** formed packing rings, Figures 15A and 15B, is an alternative choice whenever the operating temperature exceeds that determined for the use of PTFE "V" rings. The materials employed in the formed packing rings of the **OpDX** are braided PTFE for use in temperatures up to 500°F (260°C) and Grafoil for use in temperatures up to 752°F (400°C). The Grafoil formed packing rings are an excellent choice whenever packing is subjected to high operating temperatures, however it should be noted that the demand of high forces required to achieve a tight sealing results in a significant friction increase forces as the valve plug turns.

Special Packing

The PT type packing set, Figure 16A, is composed by a set of "V" type rings under compression by an assembly of disc springs that result in a "live-loading" effect. This system achieves a sealing level of below 500 ppm. The PT type packing combines the superior virgin PTFE "V" rings quality with the PTFE "V" rings combined with carbon filament wound. The PTG type packing, Fig. 16B, is composed of an advanced packing set that is capable of keeping a sealing rate very below 500 ppm (at a 10 ppm step rate). The PTG packing set is composed by the combination of PTFE "V" rings with carbon filament wound and Kalrez® "V" rings, an advanced material that provides a superior performance to the packing set. For temperatures higher than 450°F (232° C) the PTG XT packing set is employed. This type of packing utilizes Zymax® rings instead the PTFE/carbon rings.

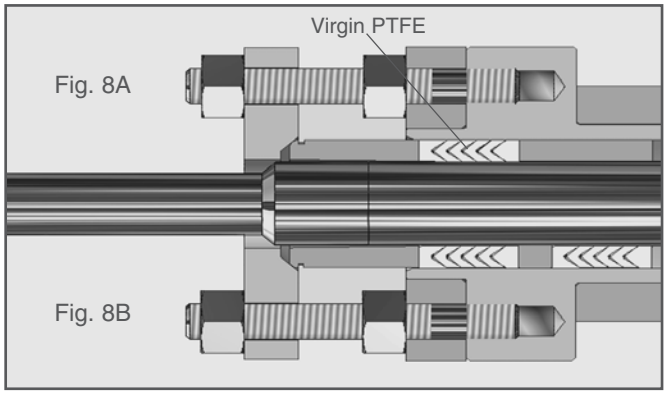

Figure 14A: Standard Packing: "V" rings
Figure 14B: Double Packing: "V" rings

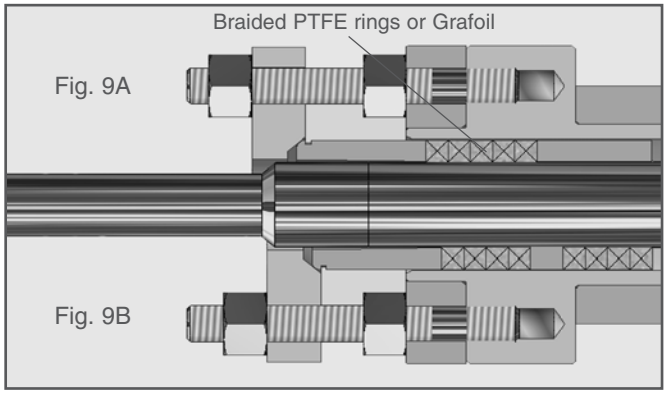

Figure 15A: Packing: Formed Rings
Figure 15B: Double Packing: Formed Rings

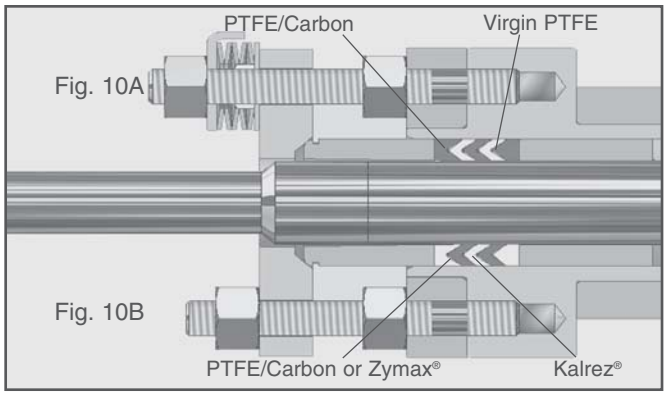

Figure 16A: PT Packing Set
Figure 16B: PTG Packing Set

OpDX
Packing – Specifications

Table V: Packing Temperature Limitations (˚F/˚C)

Packing Material	Standard bonnet (1)		Extended bonnet (1)		Cryogenic extended body	
	˚F	˚C	˚F	˚C	˚F	˚C
Teflon TFE	-20 a 450	-28 a 232	-150 a 600 (2)	-101 a 315	-420	-251
braided PTFE (3)	-20 a 500	-28 a 260	-150 a 650	-101 a 343	-420	-251
Glass-filled Teflon, PTFE	-20 a 500	-28 a 260	-150 a 650	-101 a 343	-420	-251
Asbestos-free w/ inconel (4)	-20 a 750	-28 a 398	-20 a 1200	-28 a 649	N/R	N/R
Grafoil (5)	-20 a 750	-28 a 398	-20 a 1500	-28 a 815	N/R	N/R
PTG	-20 a 450	-28 a 232	-150 a 600	-101 a 315	-420	-251
PT	-20 a 450	-28 a 232	-20 a 600	-28 a 315	-250	-156
PTXT	-20 a 550	-28 a 289	-20 a 700	-28 a 371	-250	-156

(1) The ANSI B16.4 standard specifies pressure/temperature limitations for the valve bodies. Consult our Engineering Dept.. for additional information.
(2) If the appropriate body and bonnet materials are used.
(3) 8 to 12-inch, Class 150-600; and 3 to 12-inch, Class 900 – 2500 can be used to 850°F (455°C).
(4) Asbestos-free, high temperature packing.
(5) Do not use Grafoil above 800°F (427°C) in oxiding services such as air or oxygen.

Table VI: Packing Maximum Allowable Pressure, Standard Bonnet (psi/bar)

Material		Maximum temperature																			
		˚F	˚C	˚F	˚C	˚F	˚C	˚F	˚C	˚F	˚C	˚F	˚C	˚F	˚C	˚F	˚C	˚F	˚C	˚F	˚C
		100	38	150	65	200	93	250	121	300	149	350	177	400	204	450	232	500	260	550	288
Teflon TFE	psi	1700		1200		800		470		400		280		170		110					
	bar		116		82		54		32		27		19		11		7.5				
Braided PTFE	psi	3500		1700		1200		1000		780		600		500		400		220			
	bar		238		116		82		68		53		41		34		27		15		
Glass-filled Teflon PTFE	psi	3500		1700		1200		1000		780		600		500		400		220			
	bar		238		116		82		68		53		41		34		27		15		
PTG	psi	1700		1200		900		700		580		480		370		320					
	bar		116		82		61		48		39		33		25		22				
PT	psi	1700		1200		900		700		580		480		370		320					
	bar		116		82		61		48		39		33		25		22				
PTXT	psi	6000		2000		1500		1100		960		700		590		440		390		300	
	bar		408		136		102		75		67		48		40		30		26		20

Table VII: Packing Maximum Allowable Pressure, Extended Bonnet (psi/bar)

Packing Material		Maximum temperature																			
		˚F	˚C	˚F	˚C	˚F	˚C	˚F	˚C	˚F	˚C	˚F	˚C	˚F	˚C	˚F	˚C	˚F	˚C	˚F	˚C
		200	93	300	149	350	177	400	205	450	232	500	260	550	288	600	316	650	343	700	371
Teflon TFE	psi	1300		800		650		500		380		280		200		175		160			
	bar		88		54		44		34		26		19		13.5		12		11		
Braided PTFE	psi	1300		1300		800		650		510		410		310		270					
	bar		88		88		54		44		35		29		21		18				
Glass-filled Teflon PTFE	psi	1300		1300		800		650		510		410		310		270					
	bar		88		88		54		44		35		29		21		18				
PTG	psi	1300		800		650		500		380		280		200		175		160			
	bar		88		54		44		34		26		19		13.5		12		11		
PT	psi	1300		800		650		500		380		280		200		175		160			
	bar		88		54		44		34		26		19		13.5		12		11		
PTXT	psi	1300		1300		1300		800		600		480		400		330		280		230	
	bar		88		88		88		54		41		33		27		22		19		15.6

OpDX

Specifications: △P / Temperature

Table VIII : SHAFTS - Maximum Allowable Pressure Drop (psi) versus Temperature

Temperature		Shaft material													
		17 - 4 PH							Nitronic						
		Valve Size (inches)													
°F	°C	2	3	4	6	8	10	12	2	3	4	6	8	10	12
600	315	1260	995	830	710	550	590	600	1466	710	590	500	395	420	430
425	218	1375	1080	905	780	605	640	650	1525	760	635	545	425	455	460
400	204	1395	1100	910	789	610	650	665	1536	770	640	550	428	460	465
300	149	1465	1150	960	830	645	690	700	1555	820	685	585	455	490	490
200	93	1530	1210	1000	870	675	720	730	1570	870	720	590	485	520	520
70	21	1600	1260	1050	910	700	750	760	1600	870	810	595	540	580	580
-50	-45	1600	1260	1050	910	700	750	760	1600	870	810	595	540	580	580
-100	-73	1600	1260	1050	910	700	750	760	1600	870	810	595	540	580	580
-400	-240								1600	970	810	595	540	580	580
Temperature		Shaft material													
		Inconel							Monel						
		Valve Size (inches)													
°F	°C	2	3	4	6	8	10	12	2	3	4	6	8	10	12
600	315	1460	1215	1010	875	420	705	735	1466	750	595	505	400	425	435
425	218	1525	1240	1030	890	455	730	740	1525	780	640	550	430	460	465
400	204	1530	1240	1035	895	460	740	750	1536	800	645	555	435	465	470
300	149	1555	1250	1040	900	485	745	755	1555	840	690	590	460	495	495
200	93	1570	1260	1050	905	520	750	760	1570	860	725	595	490	525	525
70	21	1605	1275	1060	910	580	760	770	1600	860	820	600	545	580	585
-50	-45	1605	1275	1060	910	580	760	770	1600	860	820	600	545	585	585
-100	-73	1605	1275	1060	910	580	760	770	1600	860	820	600	545	585	585
-400	-240	1605	1275	1060	910	580	760	770	1600	970	810	595	540	585	585

(1) Find the operating temperature.
(2) Select the shaft material according to the △P (lbf/inch²).
(3) Make sure that shaft material selected complies chemically with the process media.
(4) Shafts in Monel are not recommended for non-lubricating media applications.

Table IX: SEATS - Maximum Allowable Pressure Drop (psi) versus Temperature

Temperature		Seat Material													
		TFE							Glass-filled Teflon						
		Valve Size (inches)													
°F	°C	2	3	4	6	8	10	12	2	3	4	6	8	10	12
600	315														
425	218								20/20	20/20	20/20	20/20	20/20	20/20	20/20
400	204								80/80	80/80	80/80	80/80	80/80	80/80	80/80
300	149	140/140	140/140	140/140	140/140	140/140	140/140	140/140	400/400	400/400	400/400	400/400	400/400	400/400	400/400
200	93	430/430	430/430	430/430	430/430	430/430	430/430	430/430	720/720	720/720	720/720	720/720	720/720	720/720	720/720
70	21	720/720	720/720	720/720	720/720	720/720	720/720	720/720	945/945	945/945	945/945	945/945	945/945	945/945	945/945
-50	-45	720/720	720/720	720/720	720/720	720/720	720/720	720/720	945/945	945/945	945/945	945/945	945/945	945/945	945/945
-100	-73														
-400	-240														

OpDX

Specifications: △P / Temperature

Table X: SEATS – Maximum Allowable Pressure Drop (psi) versus Temperature (cont.)

Temperature		Shaft material													
		Inox 316							Kel - F						
		Valve Size (inches)													
°F	°C	2	3	4	6	8	10	12	2	3	4	6	8	10	12
600	315	180/600	180/600	180/600	180/600	180/600	180/600	180/600							
425	218	220/750	220/750	220/750	220/750	220/750	220/750	220/750							
400	204	230/770	230/770	230/770	230/770	230/770	230/770	230/770							
300	149	250/865	250/865	250/865	250/865	250/865	250/865	250/865							
200	93	260/950	260/950	260/950	260/950	260/950	260/950	260/950							
70	21	260/950	260/950	260/950	260/950	260/950	260/950	260/950							
-50	-45	260/950	260/950	260/950	260/950	260/950	260/950	260/950	925/925	925/925	925/925	925/925	925/925	925/925	925/925
-100	-73	260/950	260/950	260/950	260/950	260/950	260/950	260/950	750/750	750/750	750/750	750/750	750/750	750/750	750/750
-400	-240								200/200	200/200	200/200	200/200	200/200	200/200	200/200

(1) Select seat material and find the △P (ibf/inch²).
(2) Values shown at left are considered for shaft upstream; values at right for shaft downstream.
(3) Make sure that seat material selected complies chemically with the process flow media.

Table XI: BEARINGS – Maximum Allowable Pressure Drop (psi) versus Temperature

Temperature		Bearing Material													
		MBT							Ultimet						
		Valve Size (inches)													
°F	°C	2	3	4	6	8	10	12	2	3	4	6	8	10	12
600	315								750	750	750	750	750	750	750
425	218	350	350	350	350	350	350	350	925	925	925	925	925	925	925
400	204	375	375	375	375	375	375	375	925	925	925	925	925	925	925
300	149	490	490	490	490	490	490	490	925	925	925	925	925	925	925
200	93	600	600	600	600	600	600	600	925	925	925	925	925	925	925
70	21	740	740	740	740	740	740	740	925	925	925	925	925	925	925
-50	-45	925	925	925	925	925	925	925	925	925	925	925	925	925	925
-100	-73	925	925	925	925	925	925	925	925	925	925	925	925	925	925
-400	-240	925	925	925	925	925	925	925	925	925	925	925	925	925	925

Temperature		Bearing Material						
		Stellite						
		Valve Size (inches)						
°F	°C	2	3	4	6	8	10	12
600	315	850	850	850	850	850	850	850
425	218	925	925	925	925	925	925	925
400	204	925	925	925	925	925	925	925
300	149	925	925	925	925	925	925	925
200	93	925	925	925	925	925	925	925
70	21	925	925	925	925	925	925	925
-50	-45	925	925	925	925	925	925	925
-100	-73	925	925	925	925	925	925	925
-400	-240	925	925	925	925	925	925	925

(1) Select the bearing material.
(2) Make sure that the bearing material selected complies chemically with the process flow media.
(3) Ultimet bearings are not recommended for non-lubricating.

Table XII: BEARINGS - Temperature Limitations

Bearing Material	Temperature Range		Description
	°F	°C	
MBT	-420 to 425	-251 to 218	Stainless Steel with Teflon
Ultimet	-420 to 600	-251 to 315	Cobalt - Chrome - Nickel - Molybdenum - Tungsten
Stellite	-50 to 1200 (2)	-45 to 649	Alloy no. 6

(1) See Table X for maximum pressure drop versus temperature.
(2) For temperatures above 800° F (427° C) consult Optimux Engineering Dept.

OpDX
Specifications

Table XIII : Maximum Allowable Inlet Pressure * for various Body Ratings and Temperatures, Bar (psi)

Temperature		WCB Carbon Steel (A216)**						316 Stainless Steel (SA-351-CF8M)**						Alloy 20 (A351-CN7M)**						Hastelloy C™-276**						Monel™ 400**					
		Pressure Class						Pressure Class						Pressure Class						Pressure Class						Pressure Class					
		150		300		600		150		300		600		150		300		600		150		300		600		150		300		600	
°F	°C	Psi	Bar	Psi	Bar	Psi	Bar	Psi	Bar	Psi	Bar	Psi	Bar	Psi	Bar	Psi	Bar	Psi	Bar	Psi	Bar	Psi	Bar	Psi	Bar	Psi	Bar	Psi	Bar	Psi	Bar
-20 to 100	-29 to 38	285	19	740	51	1480	102	275	18	720	49	1440	99	230	15	600	41	1200	82	290	20	750	51	1500	103	230	15	600	41	1200	82
200	93	260	17	675	46	1350	93	240	16	620	42	1240	85	215	14	555	38	1115	76	260	17	732	50	1465	101	200	13	530	36	1055	72
300	149	230	15	655	45	1315	90	215	14	560	38	1120	77	200	13	525	36	1045	72	230	15	693	47	1388	95	190	13	495	34	990	68
400	204	200	13	635	43	1270	87	195	13	515	35	1030	71							200	13	693	47	1388	95	185	12	480	33	955	65
500	260	170	11	600	41	1200	82	170	11	480	33	955	65							185	12	600	41	1200	82	170	11	475	32	950	65
600	316	140	9	550	37	1095	75	140	9	450	31	905	62							140	9	550	37	1095	75	140	9	475	32	950	65
700	371	110	7	535	36	1065	73	110	7	430	29	865	59							110	7	535	36	1065	73	110	7	475	32	950	65
800	427	80	5	410	28	825	56	80	5	415	28	830	57							80	5	410	28	825	56	80	5	460	31	915	63
900	482	50	3	170	11	345	23	50	3	395	27	790	54																		
1000	538	20	1	50	3	105	7	20	1	365	25	725	50																		
1100	593									325	22	645	44																		
1200	649									205	14	410	28																		

* For maximum ΔP values refer to Tables V to XI

** Values as recorded in ANSI B16.34 - 1988

Table XIV: Estimated Weights for Shipment
(with standard Actuator and Positioner)

Valve Size (in)	Weight		Valve Size (in)	Weight	
	pounds	kg		pounds	kg
2	40	18	14	280	127
3	50	23	16	320	145
4	60	27	18	390	177
6	80	36	20	540	245
8	120	55	24	680	309
10	190	86	30	830	377
12	250	114			

Table XV: Pressure Classes

Valve Size (in)	ANSI Standard (Pressure Class)*
2	150, 300 & 600
3	
4	
6	
8	
10	150, 300
12	
14	150
16	
18	
20	
24	
30	

* Consult Optimux for higher pressure classes

OpDX
Flow Coefficients, C_V

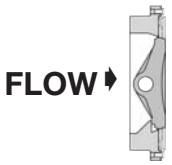

Table XVI: Flow Coefficients, C_V - Shaft UPSTREAM

Valve Size (in)	C_V - Percent Open									
	100	90	80	70	60	50	40	30	20	10
2	63	67	70	66	61	53	43	23	10.7	2.5
3	134	136	128	127	120	101	77	49	27	8.3
4	349	346	325	311	289	237	174	109	52	12.6
6	817	729	626	540	420	320	236	160	95	29
8	1644	1535	1244	1041	807	602	411	271	159	54
10	2780	2627	2185	1750	1363	991	668	434	245	100
12	4000	3838	3243	2622	2082	1553	1046	649	362	153
14	6640	6280	5280	4300	3340	2460	1670	1040	585	239
16	8400	7720	6430	5120	4100	3110	2120	1310	740	302
18	10350	9790	8240	6700	5210	3830	2610	1620	920	370
20	13670	12930	10880	8850	6880	5070	3450	2140	1210	490
24	20200	19120	16110	13080	10160	7490	5100	3160	1780	730

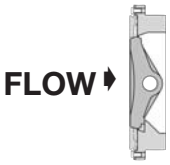

Table XVII: Flow Coefficients, C_V - Shaft DOWNSTREAM

Valve Size (in)	C_V - Percent open									
	100	90	80	70	60	50	40	30	20	10
2	58	59	60	60	57	49	38	22	10.2	2.4
3	123	124	120	115	111	99	81	54	29	8.8
4	242	252	232	200	187	173	135	87	45	10
6	819	775	647	521	419	330	246	172	101	32
8	1563	1522	1230	997	792	621	444	299	161	53
10	2640	2424	2023	1593	1227	924	618	343	193	62
12	3860	3590	2970	2380	1900	1420	985	655	384	180
14	6380	5870	4890	3890	3030	2270	1600	1080	677	287
16	8070	7410	6180	4930	3840	2870	2020	1360	856	364
18	9950	9150	7620	6070	4730	3540	2490	1680	1050	448
20	13300	12220	10170	8100	6310	4720	3320	2240	1410	600
24	19600	18070	15010	11980	9330	6980	4910	3320	2080	880

OpDX
Dimensions

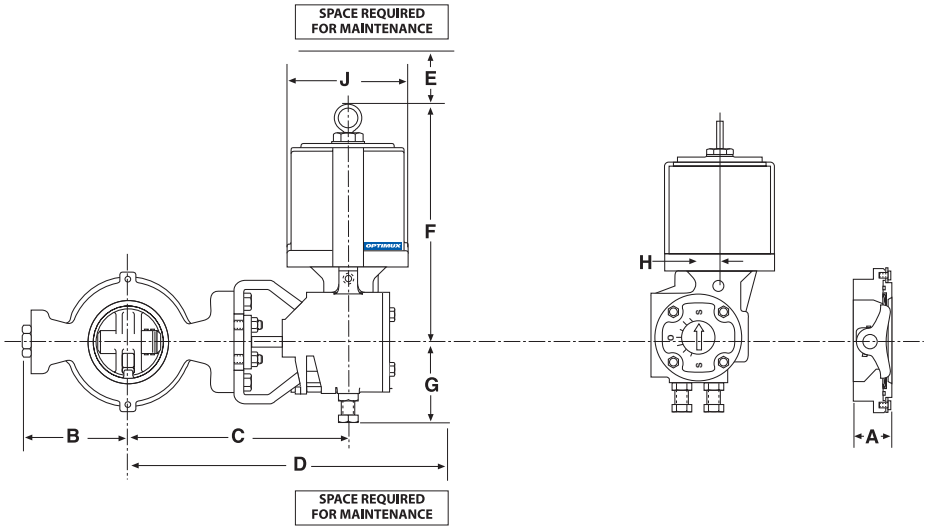

Table XVIII: OpDX - Dimensions (in/mm)
Body Class ratings 150, 300, 600 - 2" to 8"; 150, 300 - 10" and 12"
(with disk/shaft assembly in Classes 150/300)

Valve Size (in)	Actuator Size	Shaft Diam. (inch)	A*		B		C		D		E		F		G		H		J	
			in	mm	in	mm	in	mm	in	mm	in	mm	in	mm	in	mm	in	mm	in	mm
2	25	.62	1.8	44	4.3	110	11.4	288	18.3	465	5.3	135	13,3	338	4.5	114	1.1	28	6.5	165
	50	.62	1.8	44	4.3	110	11.4	288	19.1	485	7.5	191	18,3	465	5.8	147	2.0	51	9.1	231
3	25	.62	1.9	48	5.1	130	11.7	298	18.7	475	5.3	135	13,3	338	4.5	114	1.1	28	6.5	165
	50	.62	1.9	48	5.1	130	11.7	298	19.5	495	7.5	191	18,3	465	5.8	147	2.0	51	9.1	231
4	25	.75	2.1	54	5.9	151	12.4	315	19.4	493	5.3	135	13,3	338	4.5	114	1.1	28	6.5	165
	50	.75	2.1	54	5.9	151	12.4	315	20.2	513	7.5	191	18,3	465	5.8	147	2.0	51	9.1	231
6	50	.87	2.3	57	7.6	192	14.3	363	22.1	561	7.5	191	18,3	465	5.8	147	2.0	51	9.1	231
	100	.87	2.3	57	7.6	192	14.3	363	24.5	622	8.5	216	22,9	582	7.5	191	2.4	61	12.5	318
8	50	1.12	2.5	64	8.6	219	16.3	415	24.1	612	7.5	191	18,3	465	5.8	147	2.0	51	9.1	231
	100	1.12	2.5	64	8.6	219	16.3	415	26.5	673	8.5	216	22,9	582	7.5	191	2.4	61	12.5	318
10	50	1.12	2.8	71	9.7	246	17.5	444	25.2	640	7.5	191	18,3	465	5.8	147	2.0	51	9.1	231
	100	1.12	2.8	71	9.7	246	17.5	444	27.7	704	8.5	216	22,9	582	7.5	191	2.4	61	12.5	318
12	100	1.50	3.2	81	11.2	283	18.7	474	28.9	734	8.5	216	22,9	582	7.5	191	2.4	61	12.5	318

- Dimensions for reference only. Certified drawings provided if required. - For sizes 14" to 30" consult Optimux.
* Body according to MSS SP67.

TRIMTECK®
OPTIMUX®

OpDX

Additional Information

The following information is required when ordering a OpDX control valve:

1. Preferably, the body size and eventual limitations of assembly and disassembling dimensions.
2. Original operating conditions: upstream/downstream pressures, temperature, flow rate, specific gravity or molecular weight of the fluid, steam pressure or gas compressibility factor.
3. Maximum temperatures and operating pressures.
4. Body and disk pressure class.
5. Material required for the body, disk, shaft, packing and bearings.
6. Pipeline diameter and schedule.
7. Actuator data type: (pneumatic or hand-operated). Fail-safe position, shut off pressure, and minimum air supply pressure.
8. Mounting orientations.
9. Accessories required.

The information and specification described in this brochure are considered as accurate. However these are for information purpose only and should not be considered as certified information.
Considered that Optimux products design are continuously improved and upgraded, specifications, dimensions, and information described herein are subjected to change without notice.
For further information or verification, consult your Optimux representative. Specific instructions for the installation, operation, troubleshooting and maintenance of the Optimux control valves are contained on the Optimux Maintenance bulletin.

Hastelloy C is a trade mark of Cabit Corporation
Monel, Inconel are trade mark of Huntington Ally
Teflon is a trade mark of E. I. DuPont Company
Stellite is a trade mark of Stoody Debro

For more information, visit our website at www.trimteck.com

nqa.
ISO 9001
Registered

Cat. OPTIMUX OpDX - Rev.05 ENG - 09/2010

Printed in USA