Leading Technologies for Control

TRIMTECK® OPTIMUX®

XL Series

OpEXL™ Eccentric Plug Valves



OpEXL Control Valve
Introduction

Rotary control valves have become one of the best control valves' choices in the market, mostly due to their capacity to handle large flows, superior rangeability, compact sizes and their shaft sealing design, all these characteristics provide a wide range of process solutions for most of control valves' industrial plant applications.

The **OpEXL** eccentric plug rotary control valve has been designed as a simple but yet robust, lightweight, and more economically-built alternative to our well known Exc Series, eccentric plug rotary valve design.

Our **OpEXL** was designed to comfortably handle differential pressures of up to 725 psi (50 bar), temperature ranges from -150º F to 752º F (-100º C to 400º C), in sizes from 1" to 4", and body class ANSI 150-300 or DIN PN 16-40.

The **OpEXL** eccentric plug provides an excellent rangeability 160:1, which is significantly higher than that of globe valves; 50:1 or 20:1 displayed in most butterfly valves. Several reduced trim sizes are also available for each valve size. These trim reductions offer a wider range of C_V values for every body size selection which enhances optimal sizing alternatives during the engineering application and selection process.

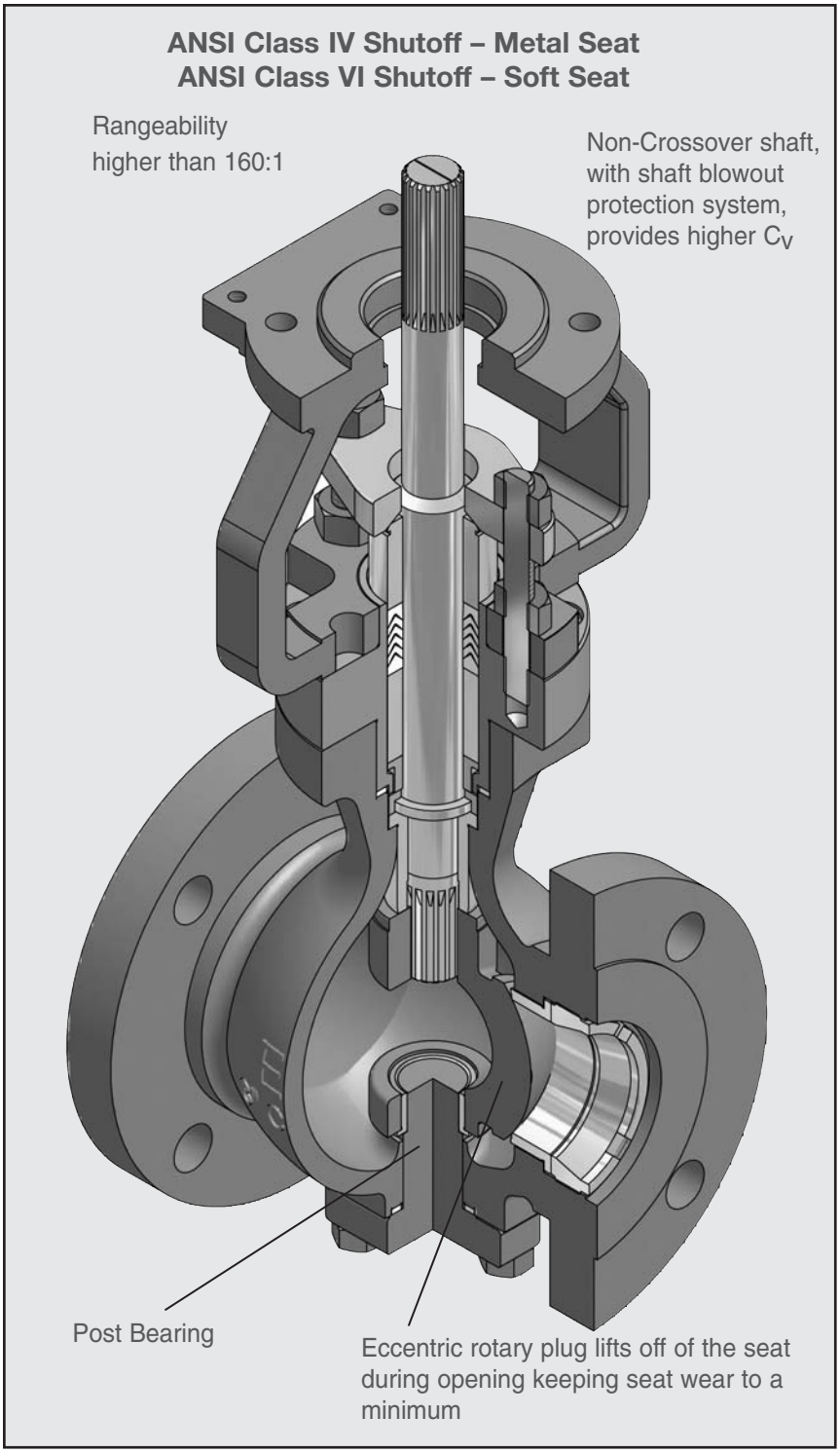

Figure 1: OpEXL Eccentric Plug Rotary Control Valve

OpEXL
Construction/Seating

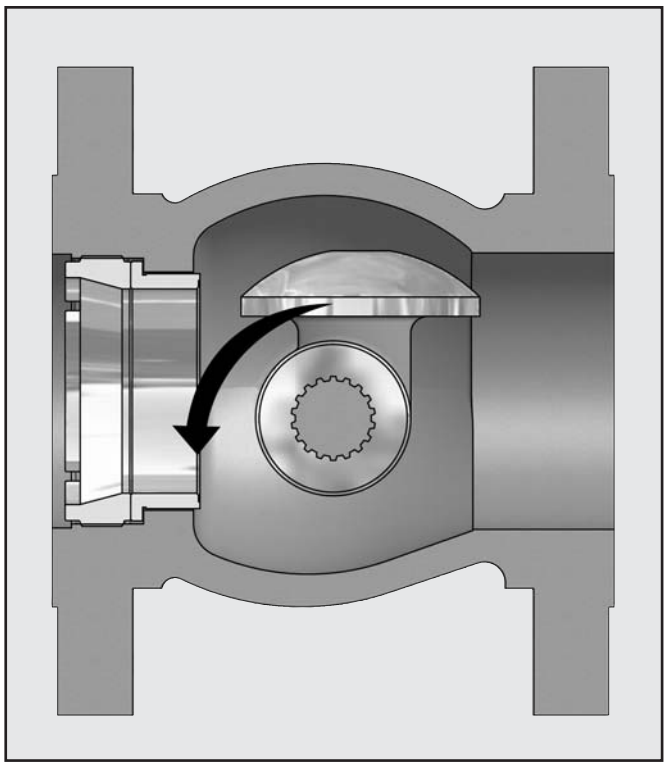

Figure 2: Valve Open

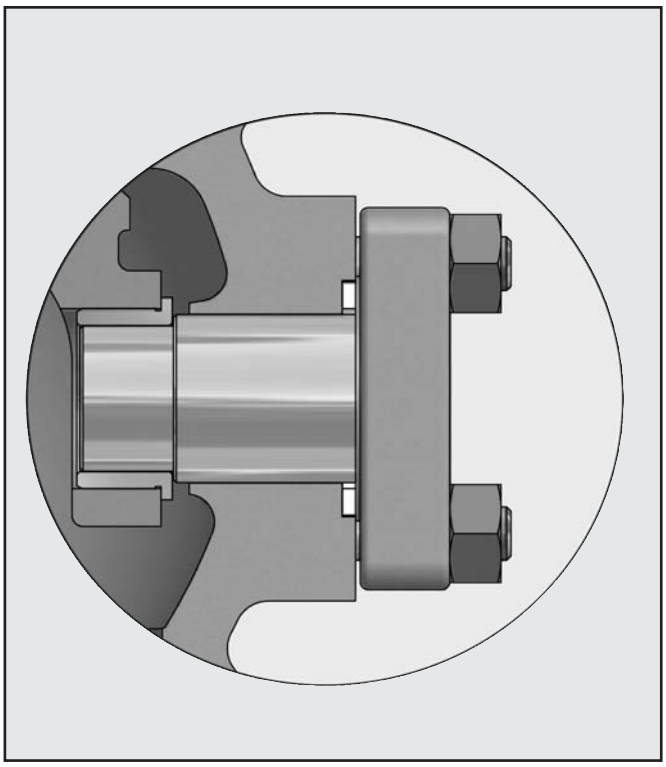

Figure 3: Post Bearing

Design Characteristics

Designed with a rugged and well sized non-cross-over shaft, higher flow capacities can be achieved for every valve size. This superior quality design characteristic eliminates potential damage caused by corrosive and/or heavy slurry processes.

In most conventional rotary control valves the shaft crosses over the valve stream line therefore causing a significant reduction in flow capacity and additionally causing unnecessary wear of the shaft. The **OpEXL** valve configuration assures a higher Cv capacity. While in the open position the streamlined fluid flow is not affected since the plug is kept totally retracted and away from the natural flow of the medium.

When the plug moves to the closed position, and due to its double-eccentricity configuration, the plug slides easily into its seat in such an angle that eliminates any direct metal-to-metal contact with its seat. This unique design characteristic contributes to drastic reductions of seat wear, therefore, less maintenance and service requirements.

As the valve opens and the eccentric plug slides smoothly off the seat, the possibility for the water-hammer effect to occur is greatly reduced, this is mainly due to the “zero breakout torque” characteristics provided by the **OpEXL** eccentric plug. This “zero-breakout torque” feature also allows for the selection and usage of smaller actuators which translates into less initial costs and life-time-maintenance costs.

Our valve design engineers have combined in one valve excellent features such as a large dimensioned post bearing system (Fig. 3), and a well sized shaft and plug made in hardened 17-4Ph as a standard, which together provide excellent tight shutoff characteristics as well as increased life expectancy of the inner parts of this assembly.

The **OpEXL** displays a large size packing box which complies to EPA* requirements and a shaft system that complies with ANSI B 16.34 standards, built in such a way as to prevent shaft blowout when the valve is still under pressure. Reduced trim sizes 70%, and 40% are offered to obtain a wide range of flow capacity.

*EPA = U. S. Environmental Protection Agency

OpEXL
Actuators/Positioners

RA Piston Cylinder Actuators

Optimux's Series RA Piston-Cylinder-Rotary-Actuators are an excellent actuation choice to obtain maximum performance of our **OpEXL** eccentric plug control valves. The Optimux Series RA piston cylinder rotary actuators with fail-safe spring combine high torques with pneumatic stiffness which together deliver excellent throttling characteristics. The Series RA compared to regular spring-diaphragm actuators, are lightweight, compact, efficient and in general, they take a smaller foot-print for installation in pipelines, they are simply, one of the best choices in actuation systems for rotary control valves.

The Series RA piston cylinder actuators are offered as a standard for all of our Rotary valves: Series VB, and Series Dx.

The Optimux Series RA piston cylinder actuator was designed to work with supply pressures of up to 150 psi (10.3 bars), which significantly increases torque capacity. The Series RA performance and reliability in the field has no par, as it has proven life service above one million cycles.

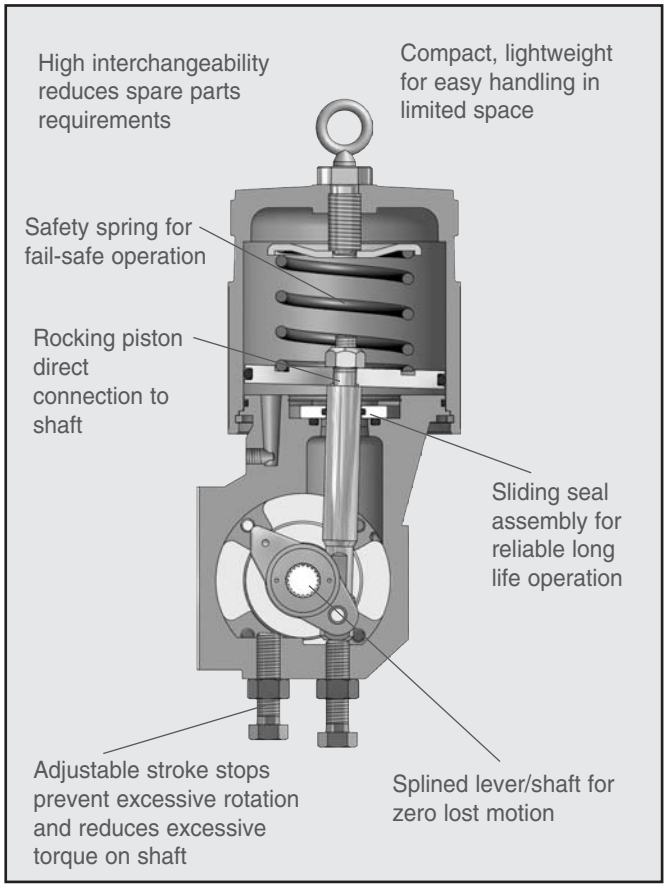

Figure 4: RA Rotary Actuator

The pneumatic stiffness achieved by the Series RA assures excellent throttling and control characteristics specially in near closing control positions.

Table I: Rotary Actuator Specifications

Type	Double-acting piston and cylinder with fail-safe spring
Sizes	25, 50
Action	Air-to-open Air-to-close Last position Field reversible
Operating Pressure	Max 150 psig Max 10,3 bars
Stroking Speed	≤ 1 second
*Temperature Range	-40˚ to 350˚F (-40˚ to 175˚ C)
Auxiliary Handwheels	Declutchable side-mounted handwheel Lever-gear operated handwheel Lever operator
Positioners	Digital HPP-3000 Digital HPP-3500

Table II: Construction Materials

Yoke	Ductile iron
Transfer Case	Anodized aluminum
Splined Lever Arm	Nickel-plated ductile iron
Stem	UNS S 41600 Stainless Steel
Bearings	Filament wound fiberglass with Teflon liner
Sliding Seal	Delrin, aluminum
Retaining Ring	Cadmium plated steel
Piston	Anodized Aluminum
Cylinder	Anodized Aluminum
O-Ring*	Buna-N (standard)
Actuator spring	Coated steel (rust proof)
Spring button	Cadmium-plated steel

* Ambient temperatures higher than 180˚ F (82˚ C) require Viton O-rings. Ambient temperatures below -40˚ F (-40˚C) require fluorosilicone O-rings.

Rotary Actuators, Features and Characteristics

RPA Rack and Pinion Actuators

Optimux's Series RPA represent an excellent alternative to our RA Piston-Cylinder Series for rotary valves applications. As with the RA Series the RPA actuators are compact, allow for field reversibility, provide adequate torque for most standard applications and are easy to maintain. RPA actuators are designed for extremely long cycle life when utilized in normal loading applications. The RPA actuators will take service temperatures of -10º to 275º F (-23º to 135º C).

The Series RPA actuators are also offered for all our rotary valves: Series DX and Series VB.

Table III: Double Acting Torque Values (in. Lbs)

PSI	40	60	80	100	120
RPA052	263	395	526	658	789
RPA148	740	1,109	1,479	1,849	2,219
RPA222	1,109	1,664	2,218	2,773	3,327
RPA470	2,071	3,106	4,142	5,177	6,213
RPA900	4,550	6,825	9,100	11,375	13,650

*Other model numbers and torque options are also available

Optimux® HPP4000 Smart Valve Positioners

Our new HPP4000 brings to the market all the field proven attributes of our former HPP3000 plus all the additional features our users have requested for the past few years: LCD Display, 4-20mA feedback signal, HART® communication protocol and Auxiliary Limit Switches, all of these within our legendary and well proven robust enclosure capable of sustaining the most rigorous industrial plant conditions.

But this is not all, the HPP4000 was designed to accurately position your control valve and to operate it efficiently at the lowest possible air consumption (LPM) bellow 3 LPM @ 100 psi.

Optimux® HPP4500 Smart Valve Positioners

Our new HPP4500 microprocessor equipped, current-to-pneumatic digital positioner is a reliable, accurate and robust positioner which offers as a standard many features and technical characteristics traditionally offered as options by other digital positioner's manufacturers.

The HPP4500 offers as a standard, Hart® communication, 4-20mA Feedback Signal and a LCD display.



Figure 11: RPA Rack and Pinion Actuator



Figure 12: HPP4000 Digital Series



Figure 13: HPP4500 Digital Series

OpEXL
Construction Materials

Built For High Performance

Manufactured with a rugged oversized shaft and post bearing, the **OpEXL** rotary control valve prevents damages that may occur on its own shaft.

The rotary plug is manufactured in its standard configuration with 17-4 PH heat hardened stainless steel, however the inner parts assembly can be also constructed in solid Alloy #6 type steel, providing for an excellent tight shutoff and enhancing its use in a wide range of applications such as in flashing conditions, corrosive services, mild cavitation, and steam services as well.

The non-crossover shaft design, a characteristic of the **OpEXL** eccentric plug rotary control valve pervents the line from clogging, assuring an uninterrupted flow passage. When the valve is in the open position, the flow is not diverted to the seat or seat retainer, delivering excellent performance even after several years of operation.

The connection between the plug and the shaft is achieved via a tight and precise splined connection, eliminating the use of keys and/or taper pins which are prone to corrosion and/or wear due to vibration. The rugged, rigid and heavy-duty seat design is excellent for applications where the valve is subjected to high pressure drops.

The typical maintenance cycle of the **OpEXL** exceeds the period of five years and the service life expectation exceeds a period of twenty years.

After a detailed analysis of the **OpEXL** control valve under the reliability viewpoint, other considerations should be added to its performance such as: it can provide a flow capacity of up to 70% higher when compared to the eccentric plug rotary valves of other manufacturers. The **OpEXL** can be installed in processes handling paper pulp concentration of up to 3% due to its non-crossover shaft design. The valve design permits the valve to withstand a pressure drop of up to 725 psi (50 bars) in the closed position. It also allows the valve to be installed with shaft upstream or downstream. Reduced trim areas of 70% and 40%. Leakage class ANSI Class IV with metal seat and Class VI with soft seat. Shaft blowout protecting system eliminates the risk of personal injury caused by fluid pressure, fires and process interruptions do to accidents. Plug rotation of 90 degrees with the use of a high performance double-acting rotary cylinder piston fail-safe spring actuator.

Table IV: Body Specifications

Size (inches)	1; 1.5; 2; 3; 4 DN 25; 40; 50; 80; 100
End Connection	Flanged RF
Finish	125-250 Rc standard
Rating class	ANSI Class 150-300 DN PN 16-40
Face-to-face dimension	ISA S75.04
Seat Area	Full 100% Reduced 70% Reduced 40%
Leakage Class	ANSI Class IV – metal seat ANSI Clas VI – soft seat
Operating Temperature	-150˚ F to 752˚ F (-100˚C TO 400˚C)

Table V: Flow Direction

Installation	Flow	Application
Standard	Shaft downstream flow into the convex plug face	Clean fluid No cavitation
Reversed	Shaft upstream flow onto the outward plug face	Fluid with entrained particles, cavitation or flashing

Table VI: Packing Temperature Limitations

Type of Material	Temperature	
	˚F	˚C
“V”-rings – PTFE	-150 to 450	-101 to 232
Braided PTFE	-20 to 500	-28 to 260
Grafoil	-20 to 752	-28 to 400
PT	-20 to 450	-28 to 232
PTG	-20 to 450	-28 to 232
PTG XT	-20 to 550	-28 to 288

*Pressure class versus body material limitations must not be exceeded

Table VII: Standard Construction Materials Carbon Steel Sub-assembly

Part	Material Classification	Specifications		
		ASTM Code (AMS No.)	UNS Code	Hardness Rc
Body	Carbon steel – Cast	A 216 WCB	J 03002	
Plug	17-4PH – Cast	A 747, Gr CB7-Cu-1	J 92180	35-38 C
	Alloy #6 – Cast	AMS 5387	R 30006	40-42 C
Shaft	17-4 PH – Bar	A 564 Gr 630	S 17400	35 C
Post	17-4 PH – Cast	A 747 Gr CB7-Cu-1	J 92180	35-38 C
Bearings (shaft/plug)	440C – Bar	A 276	S 44004	55-60 C
Seat retainer	316 – Cast	A 351 Gr CF8M	J92900	
Metal seat	316 – Bar	A 479 Gr 316	S 31600	
	420 – Cast	A 743 Gr CA40	J 91160	38-45
	Alloy #6 – Cast	AMS 5387	R 30006	40-42 C
Soft seat	316 – Bar / PTFE	A 479 Gr 316	S 31600	
Thrust bearing	316 – Bar / 440 Bar	A 479 Gr 316 / A 276	S 31600 / S 44004	55-60 C
Gland flange	316 – Cast	A 351 Gr CF8M	J 92900	
Packing follower	316 – Bar	A 479 Gr 316	S 31600	
Packing spacer	316 – Bar	A 479 Gr 316	S 31600	

Table VIII: Standard Construction Material Stainless Steel Sub-assembly

Part	Material Classification	Specifications		
		ASTM Code (AMS No.)	UNS Code	Hardness Rc
Body	316 – Cast	A 351 Gr CF8M	J 92900	
Plug	17-4PH – Cast	A 747, Gr CB7-Cu-1	J 92180	35-38 C
	Alloy #6 – Cast	AMS 5387	R 30006	40-42 C
Shaft	17-4 PH – Bar	A 564 Gr 630	S 17400	35 C
Post	17-4 PH – Cast	A 747 Gr CB7-Cu-1	J 92180	35-38 C
Bearings (shaft/plug)	Duplex – Cast	A 890 4A	J 92205	15-25
Seat retainer	316 – Cast	A 351 Gr CF8M	J92900	
Metal seat	316 – Bar / CVD-5B	A 479 Gr 316	S 31600	72 C
	Alloy #6 / CVD-5B	AMS 5387	R 30006	40-42 C / 72 C
Soft seat	316 – Bar / PTFE	A 479 Gr 316	S 31600	
Thrust bearing	316 – Bar / Duplex 2205	A 479 Gr 316 / A 890	S 31600 / J 92205	16 / 15-25
Gland flange	316 – Cast	A 351 Gr CF8M	J 92900	
Packing follower	316 – Bar	A 479 Gr 316	S 31600	
Packing spacer	316 – Bar	A 479 Gr 316	S 31600	

OpEXL

Body Materials

Table IX: Body Pressure and Temperature Limitations (ANSI 16.34)

Material	End Connections	Pressure		Temperature	
		PSI	Bar	°F	°C
ASTM A-216 Gr. WCB Carbon Steel	ANSI 150#	285	19,7	-20 to 100	-29 to 38
		260	17,3	200	93
		250	17,2	300	149
		245	16,9	400	204
		230	15,9	500	260
		210	14,5	600	316
		205	14,1	650	343
		195	13,4	750	399
	ANSI 300#	725	50,0	-20 to 100	-29 to 38
		675	46,5	200	93
		655	45,2	300	149
		635	43,8	400	204
		600	41,4	500	260
		545	37,6	600	316
		535	36,9	650	343
		505	34,8	750	399
ASTM A-351 Gr. CF8M Stainless Steel	ANSI 150#	275	19,0	-20 to 100	-29 to 38
		205	14,1	200	93
		185	12,8	300	149
		175	12,1	400	204
		170	11,7	500	260
		165	11,4	600	316
		160	11,0	750	399
	ANSI 300#	725	50,0	-20 to 100	-29 to 38
		535	36,9	200	93
		485	33,4	300	149
		455	31,4	400	204
		450	31,0	500	260
		435	3,0	600	316
		430	29,7	650	343
		420	29,0	700	371
		410	28,3	750	399

Table X: Maximum Pressure Drop*

Nominal Valve Size		Shaft Diameter		Seat Diameter (Full Area Trim)		Maximum Pressure Drop* 90 Degrees Rotation (Bidirectional FLow)	
Inches	DIN	Inch	mm	Inch	mm	PSI	Bar
1	DN 25	0.44	11	.70	17,98	725	50
1.5	DN 40	0.62	16	1.1	27,98	725	50
2	DN 50	0.62	16	1.36	34,75	725	50
3	DN 80	0.90	23	2.35	59,92	725	50
4	DN 100	0.90	23	3.03	76,95	725	50

*The maximum allowable pressure drop is based upon shaft mechanical resistance, however, it is limited to the pressure class. Standard limitations according to the pressure class should not be exceeded.

OpEXL
Packings

The **OpEXL** rotary valve is built with a large packing box which gives a longer service life to the packing assembly. The **OpEXL** Packing box design allows for the use of a large number of packing system options, and fully complies with the most demanding fugitive emission control regulations in modern industrial processes.

Standard Packing

The **OpEXL** standard packing set is composed by PTFE "V" rings, Figures 8A and 8B. The PTFE "V" rings are the most used packing system since their introduction, providing exceptional tight sealing. They provide a very low friction coefficient, good mechanical resistance and excellent resistance to corrosion. The PTFE "V" rings are the most common application choice for gasketing material.

The PTFE "V" rings are used within temperature ranges of -150º to 450°F (-101 to 232° C). High Temperature Packing The **OpEXL** formed packing rings, Figures 9A and 9B, is an alternative choice whenever the operating temperature exceeds that determined for the use of PTFE "V" rings. The materials employed in the formed packing rings of the **OpEXL** are braided PTFE for use in temperatures up to 500°F (260°C) and Grafoil for use in temperatures up to 752°F (400°C). The Grafoil formed packing rings are an excellent choice whenever packing is subjected to high operating temperatures, however it should be noted that the demand of high forces required to achieve a tight sealing results in a significant friction increase forces as the valve plug turns.

Special Packing

The PT type packing set, Figure 10A, is composed by a set of "V" type rings under compression by an assembly of disc springs that result in a "live-loading" effect. This system achieves a sealing level of below 500 ppm. The PT type packing combines the superior virgin PTFE "V" rings quality with the PTFE "V" rings combined with carbon filament wound. The PTG type packing, Fig. 10B, is composed of an advanced packing set that is capable of keeping a sealing rate very below 500 ppm (at a 10 ppm step rate). The PTG packing set is composed by the combination of PTFE "V" rings with carbon filament wound and Kalrez® "V" rings, an advanced material that provides a superior performance to the packing set. For temperatures higher than 450°F (232° C) the PTG XT packing set is employed. This type of packing utilizes Zymax® rings instead the PTFE/carbon rings.

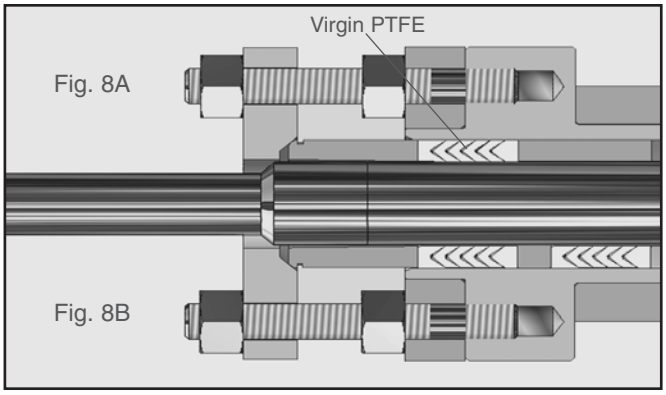

Figure 8A: Standard Packing: "V" rings
Figure 8B: Double Packing: "V" rings

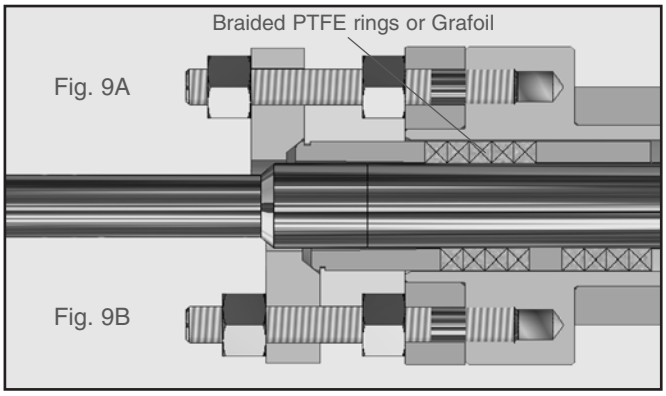

Figure 9A: Packing: Formed Rings
Figure 9B: Double Packing: Formed Rings

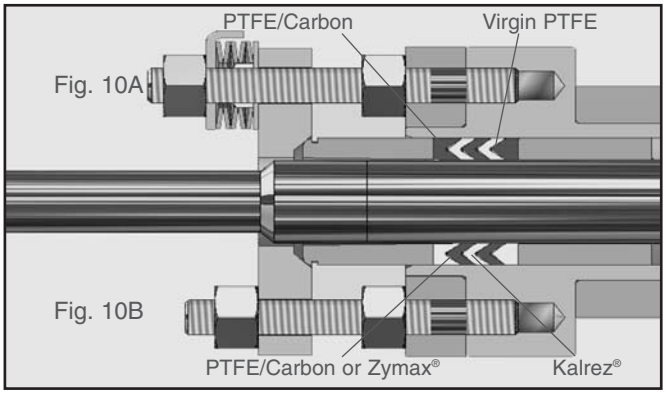

Figure 10A: PT Packing Set
Figure 10B: PTG Packing Set

Table XI: Maximum Allowable Pressure Actuator versus Supply Pressure (PSI/Bar)

Valve Nominal Size (Inches)	Air Supply Pressure		Actuator Size											
			25						50					
			Trim Area						Trim Area					
			100%		70%		40%		100%		70%		40%	
	PSI	Bar	PSI	Bar	PSI	Bar	PSI	Bar	PSI	Bar	PSI	Bar	PSI	Bar
1	40	2,7	725	50,0	725	50,0	725	50,0						
	60	4,1	725	50,0	725	50,0	725	50,0						
	80	5,5	725	50,0	725	50,0	725	50,0						
	100	6,9	725	50,0	725	50,0	725	50,0						
	150	10,3	725	50,0	725	50,0	725	50,0						
1.5 & 2	40	2,7	725	50,0	725	50,0	725	50,0						
	60	4,1	725	50,0	725	50,0	725	50,0						
	80	5,5	725	50,0	725	50,0	725	50,0						
	100	6,9	725	50,0	725	50,0	725	50,0						
	150	10,3	725	50,0	725	50,0	725	50,0						
3	40	2,7	350	24,1	500	34,5	690	47,6	685	47,2	725	50,0	725	50,0
	60	4,1	500	34,5	650	44,8	725	50,0	725	50,0	725	50,0	725	50,0
	80	5,5	620	42,7	725	50,0	725	50,0	725	50,0	725	50,0	725	50,0
	100	6,9	725	50,0	725	50,0	725	50,0	725	50,0	725	50,0	725	50,0
	150	10,3	725	50,0	725	50,0	725	50,0	725	50,0	725	50,0	725	50,0
4	40	2,7	210	14,5	295	20,3	410	28,3	400	27,6	580	40,0	725	50,0
	60	4,1	300	20,7	415	28,6	580	40,0	580	40,0	725	50,0	725	50,0
	80	5,5	375	25,8	530	36,5	725	50,0	725	50,0	725	50,0	725	50,0
	100	6,9	445	30,7	625	43,1	725	50,0	725	50,0	725	50,0	725	50,0
	150	10,3	530	36,5	725	50,0	725	50,0	725	50,0	725	50,0	725	50,0

Note: The pressure limitations should be limited to the body and flanges pressure class.

Table XII: Seat Maximum Pressure Drop

Type of Seat	Process Medium	Open Position		Closed Position	
		PSI	Bar	PSI	Bar
Metal Seal	Liquids, Vapors	363	24,7	725	50,0
Metal Seal	Gases	725	49,3	725	50,0
Soft Seal	Liquids, Vapors	145	9,8	725	50,0
Soft Seal	Gases	290	19,7	725	50,0

Note: Pressure limitations should be limited to body and flange pressure classes.

Table XIII: Yoke Gasket/Post Bearing Maximum Pressure/Temperature

Gasket Material	Pressure		Temperature	
	PSI	Bar	PSI	Bar
PTFE	725	50	350	186
316 SS/Grafoil	725	50	752	400

Table XIV: Trim Material

Body Sub-assembly Carbon Steel

Plug	Seat	Bearings	Shaft	Post Bearing
17-4 PH	316 Stainless steel	440C Stainless steel	17-4 PH	17-4 PH
17-4 PH	420 Stainless steel	440C Stainless steel	17-4 PH	17-4 PH
Alloy #6	Alloy #6	440C Stainless steel	17-4 PH	17-4 PH

Body Sub-assembly Carbon Steel – NACE

Plug	Seat	Bearings	Shaft	Post Bearing
Alloy #6	316 Stainless steel	Duplex 2205	A 453 Gr 660	A 453 Gr 660
Alloy #6	Alloy #6	Duplex 2205	A 453 Gr 660	A 453 Gr 660

Body Sub-assembly Stainless Steel

Plug	Seat	Bearings	Shaft	Post Bearing
17-4 PH	316 Stainless steel	Duplex 2205	17-4 PH	17-4 PH
Alloy #6	Alloy #6	Duplex 2205	17-4 PH	17-4 PH

Body Sub-assembly Stainless Steel – NACE

Plug	Seat	Bearings	Shaft	Post Bearing
Alloy #6	316 Stainless steel	Duplex 2205	A 453 Gr 660	A 453 Gr 660
Alloy #6	Alloy #6	Duplex 2205	A 453 Gr 660	A 453 Gr 660

Table XV: Recommended Application

Fluid	Plug	Seat	Bearings	Flow Direction
Industrial Air and Liquids*	17-4 PH	AISI 316	440C; Duplex 2205	Shaft downstream
Liquid Hidrocarbon	17-4 PH	AISI 316	440C; Duplex 2205	Shaft downstream
	Alloy #6	Alloy #6	440C; Duplex 2205	Shaft downstream
Clean Gases	17-4 PH	AISI 316	440C; Duplex 2205	Shaft downstream
Clean Liquids	17-4 PH	AISI 316	440C; Duplex 2205	Shaft upstream
Clean Liquids w/Cavitation or Flashing	Alloy #6	Alloy #6	440C; Duplex 2205	Shaft upstream
Liquids not clean, Slurry or Abrasive	Alloy #6	Alloy #6	440C; Duplex 2205	Shaft upstream
Liquids not clean, w/Cavitation or Flashing	Alloy #6	Alloy #6	440C; Duplex 2205	Shaft upstream
Non-corrosive Chemical Products	17-4 PH	AISI 316	440C	Shaft downstream
Corrosive Chemical Products	Alloy #6	AISI 316	Duplex 2205	Shaft downstream
	Alloy #6	Alloy #6	Duplex 2205	Shaft upstream
Water Stream – 150 PSI	17-4 PH	AISI 420	440C	Shaft downstream
Water Stream – 300 PSI	Alloy #6	Alloy #6	440C	Shaft downstream

* Except O_2

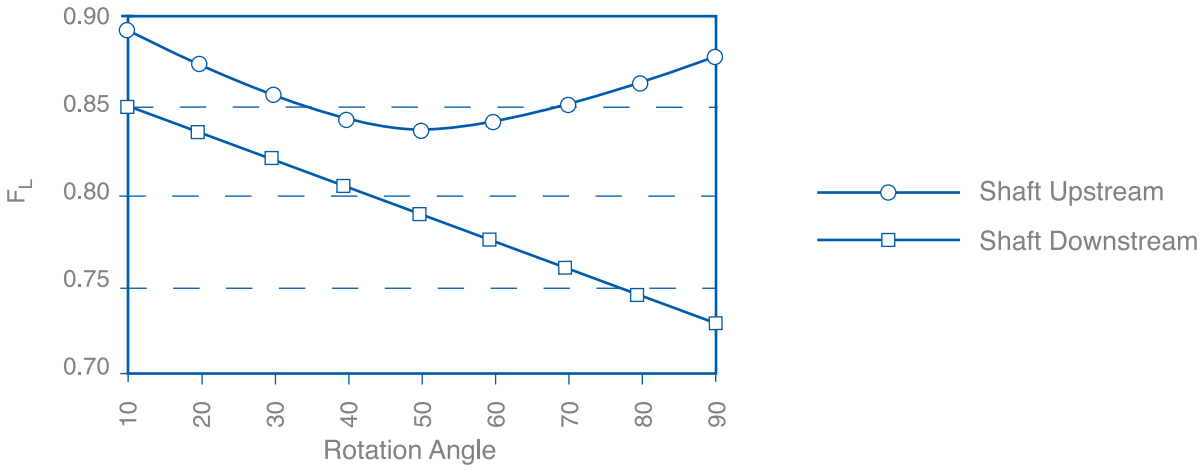

Figure 11: Pressure Recovery Factor, FL: OpEXL Eccentric Plug Rotary Control Valve

Piping Size Effect on Valve C_V Coeficient

The nominal C_V values indicated on the Tables XVI and XVII are considered for a line size valve installation, where inlet/outlet pipe and valve sizes are the same. When the valve is concentrically installed in pipelines with higher nominal sizes, the C_V coeficient is affected and should be multiplied by the "PCF" factor in Table XV.

Table XVI: C_V Correction Factor

Trim Area %	Piping Correction Factor, PCF - d/D*						
	0.4	.05	.06	0.7	.08	.09	1
100			0.91	0.94	0.97	0.99	1
70	0.93	0.94	0.96	0.97	0.98	0.99	1
40	0.98	0.98	0.99	0.99	0.99	0.99	1

* d = Nominal Valve Size
D = Larger Piping Size

Flow Coefficient: C_V

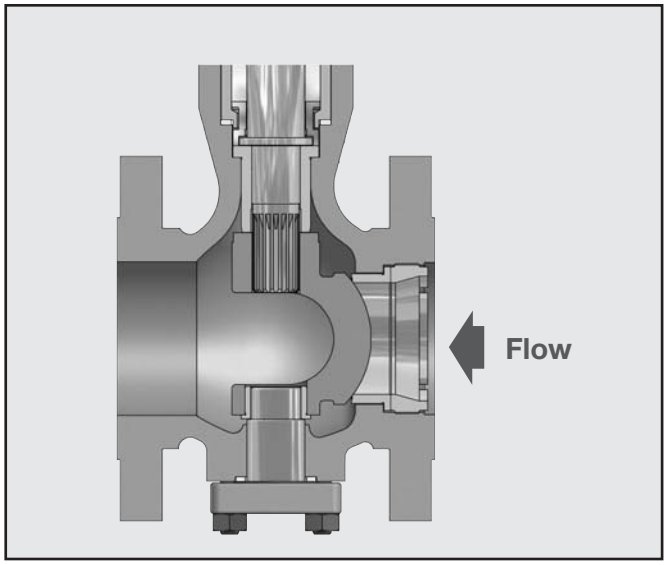

Figure 12: Shaft Downstream

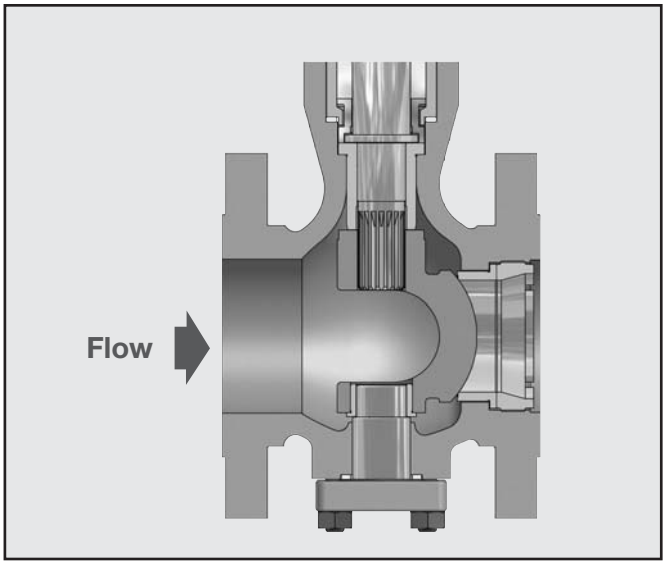

Figure 13: Shaft Upstream

Table XVII: Maximum Flow Capacity (C_V) - Shaft Downstream

Trim Area %	Opening Angle	Valve Nominal Size (Inch)									
		1		1.5		2		3		4	
		Metal	Soft	Metal	Soft	Metal	Soft	Metal	Soft	Metal	Soft
100	90	18	10	47	39	80	17	245	245	408	408
	80	17.7	9.8	44	37	78	69	224	224	380	380
	70	17.4	9.7	40	33	64	57	186	186	309	309
	60	15.9	8.8	34	28	53	47	150	150	245	245
	50	13.3	7.4	29	24	43	38	126	126	207	207
	40	10.4	5.8	22	18	35	31	99	99	162	162
	30	7.6	4.2	16	13	26	23	73	73	118	118
	20	4.2	2.4	9.2	7.6	15	13	41	41	66	66
	10	2.1	1.2	4.5	3.7	5	4	21	21	33	33
70	90	13	7	33	33	53	53	182	182	269	269
40	90	7	6	19	19	32	32	104	104	170	170

Table XVIII: Maximum Flow Capacity (C_V) - Shaft Upstream

Trim Area %	Opening Angle	Valve Nominal Size (Inch)									
		1		1.5		2		3		4	
		Metal	Soft	Metal	Soft	Metal	Soft	Metal	Soft	Metal	Soft
100	90	21	12	50	40	78	69	218	218	305	305
	80	20.6	11.8	48	38	74	65	198	198	295	295
	70	19.5	11.1	44	35	66	58	170	170	263	263
	60	17.7	10.1	40	32	55	49	142	142	225	225
	50	15.7	9.0	33	26	45	40	115	115	183	183
	40	12.5	7.1	26	21	36	23	92	92	146	146
	30	9.1	5.2	19	15	26	17	67	67	106	106
	20	5.4	3.1	11.5	9.2	15	13	40	40	63	63
	10	2.0	1.1	4.2	3.4	4.7	4.2	15	15	23	23
70	90	15	8	35	35	55	55	167	167	223	223
40	90	8	6	20	20	31	31	68	68	150	150

OpEXL
Actuator Sub-assembly Dimensions

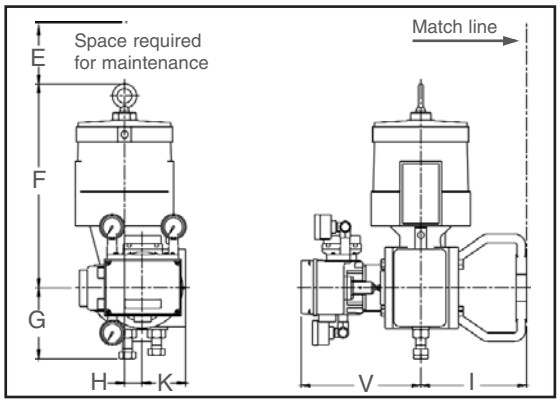

Actuator Size	Dimensions (inches / mm)													
	E		F		G		H		I		K		V	
	in.	mm	in.	mm	in.	mm	in.	mm	in.	mm	in.	mm	in.	mm
25	6.0	152	13.1	334	4.6	116	1.1	29	6.8	174	2.9	74	7.7	196
25 EF	9.3	236	17.4	441	4.6	116	1.1	29	6.8	174	2.9	74	7.7	196
50	8.0	203	18.1	461	5.6	144	2.0	51	6.8	174	3.8	96	7.7	196
50 EF	9.8	249	24.0	609	5.6	144	2.0	51	6.8	174	3.8	96	7.7	196

Fig. 14: RA Series Actuator with HPP3500 Positioner

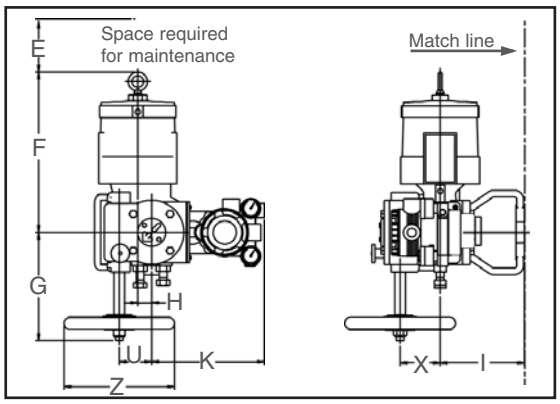

Actuator Size	Dimensions (inches / mm)													
	F		G		H		I		K		U		X		Z	
	in.	mm	in.	mm	in.	mm	in.	mm	in.	mm	in.	mm	in.	mm	in.	mm
25	13.1	334	8.9	226	1.1	29	6.8	174	9.2	233	2.6	67	3.3	83	9.0	228
25 EF	17.4	441	8.9	226	1.1	29	6.8	174	9.2	233	2.6	67	3.3	83	9.0	228
50	18.1	461	9.4	238	2.0	51	6.8	174	10.1	256	3.4	86	3.3	83	12.0	305
50 EF	24.0	609	9.4	238	2.0	51	6.8	174	10.1	256	3.4	86	3.3	83	12.0	305

Fig. 15: RA Series Actuator w/ Handwheel & HPP3000 Positioner

OpEXL
Body Sub-Assembly Dimensions

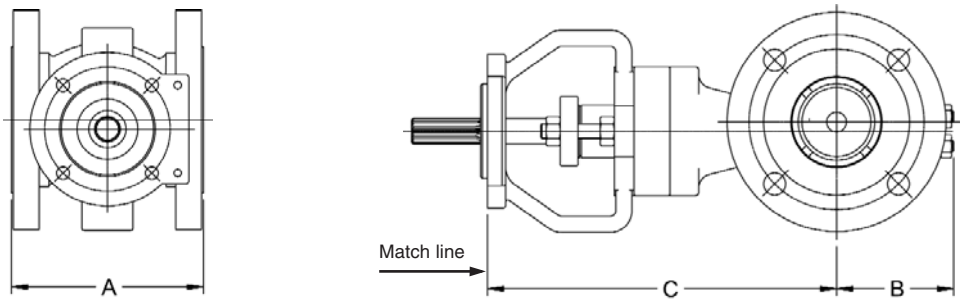

Fig. 16: OpEXL Body Sub-assembly

Dimensions			Valve Size (Inches)				
			1	1.5	2	3	4
A	150	in.	4.0	4.5	4.9	6.5	7.6
		mm	102	114	124	165	194
	300	in.	4.0	4.5	4.9	6.5	7.6
		mm	102	114	124	165	194
B	150	in.	2.7	2.8	2.9	4.0	4.2
		mm	69	71	74	102	107
	300	in.	2.7	2.8	2.9	4.0	4.2
		mm	69	71	74	102	107
C	150	in.	8.7	9.8	9.8	12.0	12.2
		mm	222	248	250	304	309
	300	in.	8.7	9.8	9.8	12.0	12.2
		mm	222	248	250	304	309

OpEXL

The information and specifications described in this brochure are considered accurate, however, they are intended for information purpose only and should not be considered as certified information.
Considered that Optimux products are continuously improved and upgraded, specifications, dimensions, and information described herein are subject to change without notice.
For further information or verification, consult your Optimux representative. Specific instructions for the installation, operation, troubleshooting and maintenance of the OpEXL control valves are contained on the OpEXL Maintenance bulletin.

Manual. Teflon, Kalrez and Zymax are trade marks of E. I. DuPont Company.

For more information, visit our website at www.trimteck.com

Cat. OPTIMUX OpEXL Rev.04 ENG-09/2010 VF 40016-CI

Printed in USA