Leading Technologies for Control

TRIMTECK® OPTIMUX®

OpGL™ Globe Control Valve



www.trimteck.com

Flow Control Products

OpGL
Control Valve

Not all control valves have been created equal, and certainly our ***OpGL*** stands apart as one of the best globe control valve for industrial process applications. The ***OpGL*** has been designed to provide not only superior control for the most demanding industrial processes, but also to deliver full compliance with the most strict environmental protection regulations.

The ***OpGL*** provides exceptional tight shutoff, precise throttling and fast response to a control signal due to its innovative control valve design and the robustness of all of its components.

Fitted with our OpTK pneumatic cylinder actuator, which delivers up to three times more linear force than conventional diaphragm actuators, the ***OpGL*** plug moves accurately and fast into requested position in response to the control signal. The plug's stem is top guided inside a robust bonnet along 70% of its length, thus avoiding unwanted oscillations that often occur in cage guided control valves. Precise flow characterization geometries are machined on the face of the plug and not in the cages as occurs with traditional valve manufacturers, thus delivering a more precise characterization and accurate flow control.

The ***OpGL*** innovative design has also taken into consideration the needs of industrial plant valve maintenance personnel with features such as clamped-in seats instead of screw-in seats easily removed for maintenance, and the top entry design which makes the removal of gaskets and trims, easy and fast.

In addition the ***OpGL*** offers an extensive array of features and accessories to optimize its application on any industrial process: Anti-cavitation trims, special metal hardening processes such as CVD-5B, Bellow Seals for "Zero" fluid emissions, Class V metal-to-metal shutoff trims, etc.

In summary the ***OpGL*** will be a significant contributor to plant efficiency, product consistency, quality and savings as well as plant security and environmental regulations compliance.

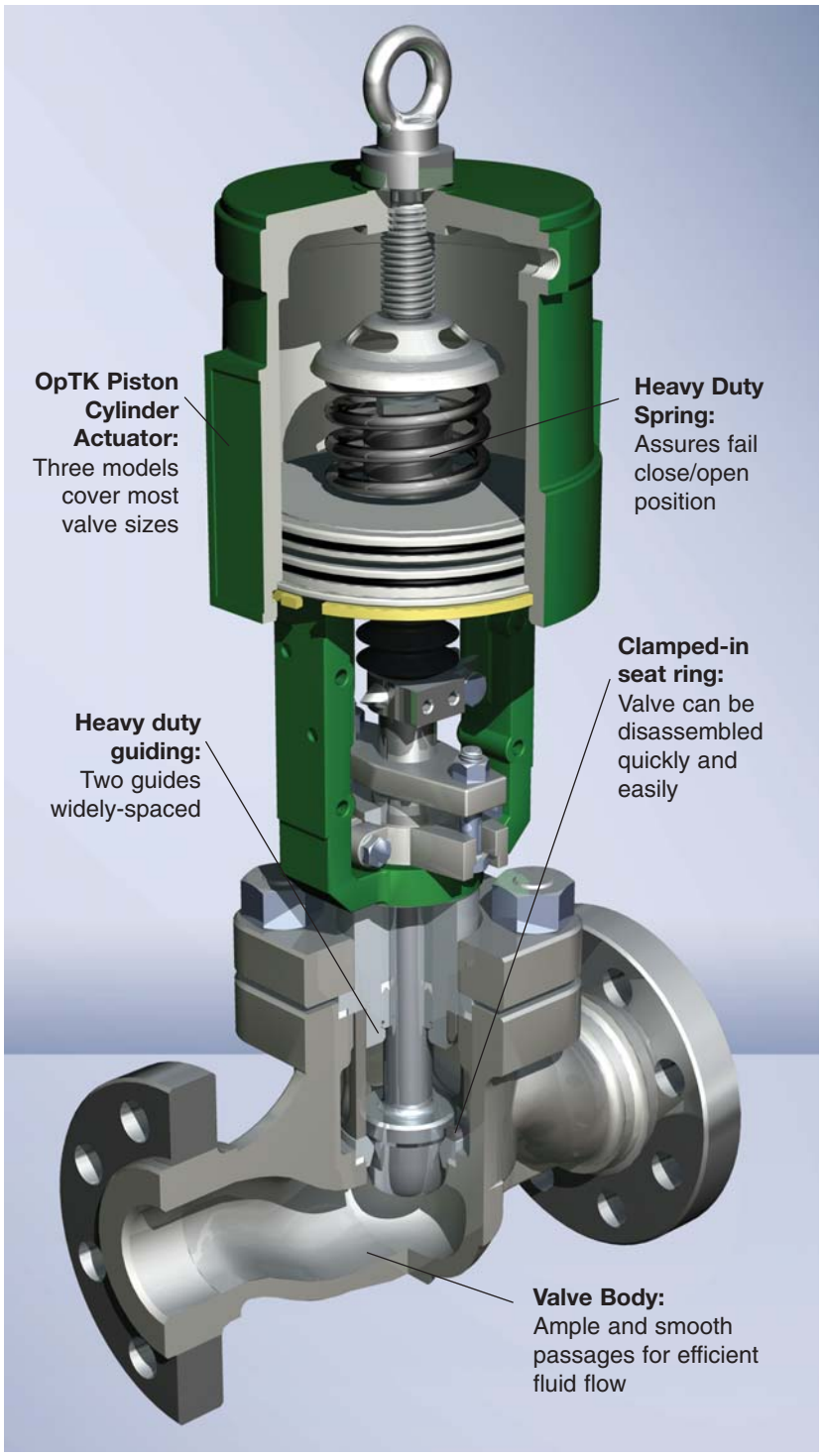

Figure 1: OpGL Body Assembly

OpGL
Features and Advantages

- **Exceptionally Tight Shutoff assures Class V Metal-to-Metal as well as Class VI with a metal-soft-metal trim.**
- **High Thrust Piston Cylinder Actuator**
- **Precise Throttling assisted by Optimux Digital and Pneumatic Positioners**
- **Top Entry Design facilitates maintenance**
- **Longer MTBS Cycles**
- **Full line of Anti-Cavitation and Noise Reducing Trims to attend any Severe Service Control Valve Application**
- **Only three Linear Actuator Sizes: OpTK 25, 50 & 100 provide the necessary linear force for most process applications.**
- **Top Guided Design within a bonnet assures consistent and precise alignment of the plug's stem along 70% of its entire length, delivering "zero" oscillations, and facilitating self-centering with its seat, for an exceptional tight shutoff.**
- **Valve and Actuator are lighter than comparable diaphragm type globe valves, also providing a smaller footprint for highly congested pipeline spaces, such as industrial process skids, off-shore platforms and FPSO's.**
- **Broad choice of trims within any given valve size which offers many Cv alternatives from micro flows to full capacity trims.**

OpTK
Linear Actuators

Optimux's spring cylinder actuator is a key element to the OpGL excellent shutoff characteristics.

The OpTK delivers more than three times the linear force offered by traditional diaphragm actuators while providing excellent throttling characteristics, stiffness and accurate response to control signal. The OpTK has been designed for supply pressures up to 150 psi (10.3 Bar), and unlike diaphragm actuators is field-reversible for air-to-open or air-to-close operations without any additional parts.

The OpTK dynamic positioning accuracy means precise control, and faster response time upon the command of the control signal. The supply pressure is directed to both sides of the piston by the positioner, for stiff and precise actuator operation. This is a significant advantage over diaphragm actuators which depend only on spring robustness and a diaphragm membrane (both susceptible to degradation and wear).

As for plant assets management objectives, the OpTK standard sizes are 25, 50 and 100 which will handle 95 percent of all process applications, achieving significant savings vis-a-vis the large inventories of linear actuators for diaphragm actuated valves which require both air-to-open as well as air-to-close models.

Table I: OpTk Linear Actuator Specifications

Type	Double-acting piston and cylinder with fail-safe spring
Sizes	25, 50 and 100
Action	Air-to-open Air-to-close Last position Field reversible
Operating Pressure	Max. 150 psig Max. 10.3 Bar
Stroking Speed	Less than 1 Second
Temperature Range	- 40 to 350 F (- 40 to 175 C) * For ambient temperatures higher than 180 F (82 C). Viton O-rings are required. * For temperatures bellow - 40 F (- 40 C), Fluorosilicone O-Rings are required.
Auxiliary Handwheels	- Declutchable side-mounted - Lever Gear - Lever Operator
Positioners	- Alphateck HPP2500 Penumatic positioner - HPP3000, 3500 & 4500 Digital Positioners

Table II: OpTK Construction Materials

Yoke	A216 WCB/ Marine epoxy paint or A316 CF8M for offshore or highly corrosive applications.
Cylinder	Aluminum Gr A356 T6 Anodized/Marine epoxy paint
Piston	6061-T6 Aluminum Alloy
Spring Button	ASTM A351 CF8M
Actuator Stem	316 SS Bar
Fail-safe Spring	Alloy Steel
Adjusting Screw	ASTM A351 CF8M
Retainer Spring	Alloy Steel oil tempered/Zinc plated

OpGL
Body Styles

Globe Style Body

Globe-style bodies feature smooth, streamlined, constant area internal passages with no pockets, permitting high capacity with minimum turbulence.

They are designed with nearly constant wall thickness, providing lower weight and cost, specially when the body is manufactured in stainless steel or expensive alloy steels.

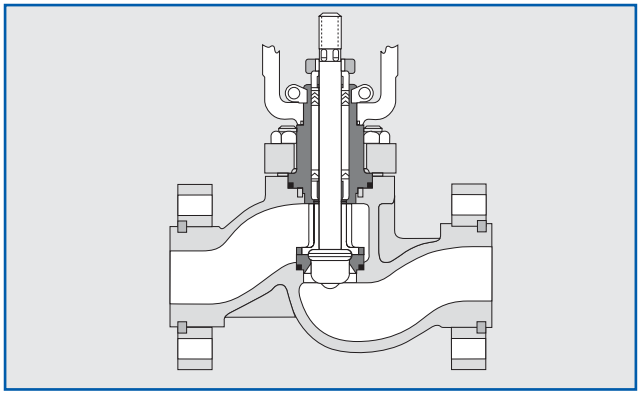

Figure 2: Globe Style body

Angle Style Body

The angle-style OpGL is completely interchangeable with the globe-style. Except for the body, all other valve parts remain the same. For additional protection of the body, a special Venturi seat ring which extends to the outlet flange is available, if required.

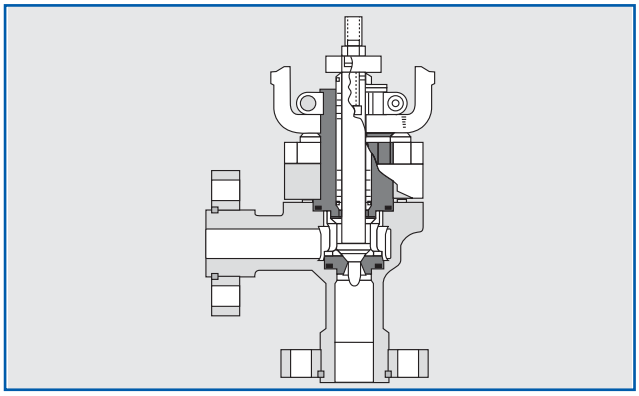

Figure 3: Angle Style body

Three-way Body

Three-way bodies are used to either combining or diverting services. Due to Optimux's excellent parts interchangeability, a standard globe valve easily converts to three-way service with the addition of a three-way adapter, upper seat ring, two gaskets, and a three-way plug.

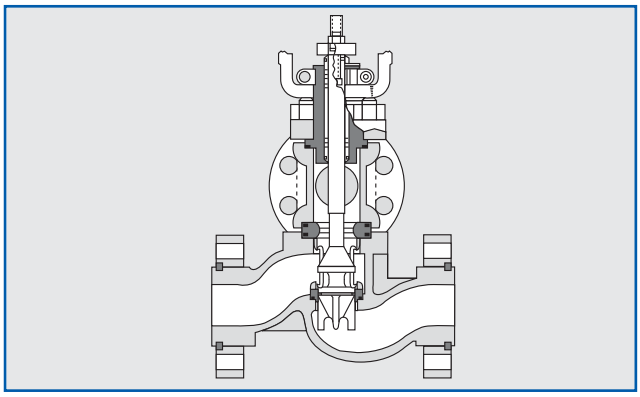

Figure 4: Three-way body

Steam Jacketed Body

The steam jacketed OpGL uses a standard globe-style body with oversized, blind flanges for a full jacket or standard flanges for a partial jacket. The jacket is rated for 150 psi (10.3 barg) and is equipped with a 3/4" NPT supply and drain connection.

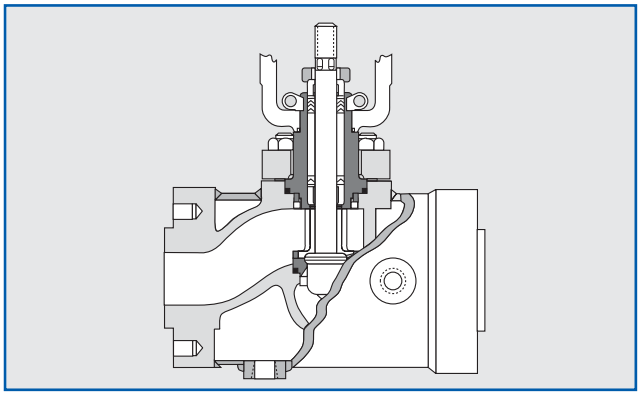

Figure 5: Steam Jacketed Body

OpGL
End connections, Flanges and Bolting

OpGL body facings come standard as raised face for integral flanges. To achieve better sealing with the pipe, the flange face is machined with spiral groove serrations. Other optional facings include smooth face, flat face, ring joint, large and small tongue and large and small groove.

Bonnet Flanges

The bonnet flange incorporates the same separable design as the end flanges. It is normally manufactured in carbon steel; however, it too can be specified in stainless steel when required.

Bonnet Flange Bolting

Standard bonnet utilizes screwed studs and nuts. Standard material for the studs are ASTM A 193 Gr B7 and nuts ASTM A 194 Gr 2H, suitable for temperatures between -20°F to 800 °F (-29°C to 426°C). Studs and nuts can be also furnished in stainless steel and are suitable for temperatures between -423°F to 1500°F (-253° to 816°C). These temperature limits are for maximum pressure permitted by ASTM B 16.34 - 1988.

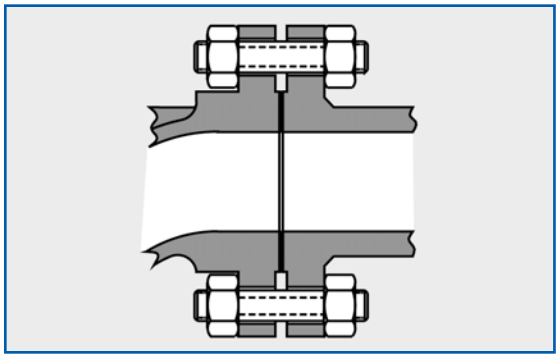

Fig. 6: Integral Flanges

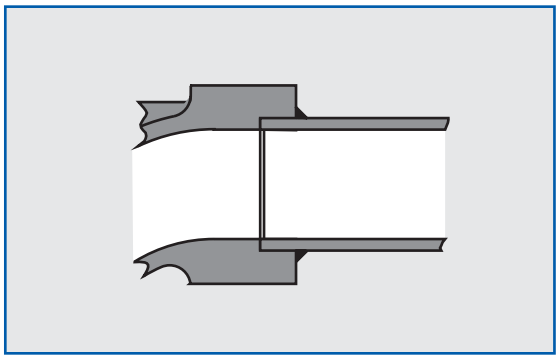

Fig. 7: Socketweld (SW)

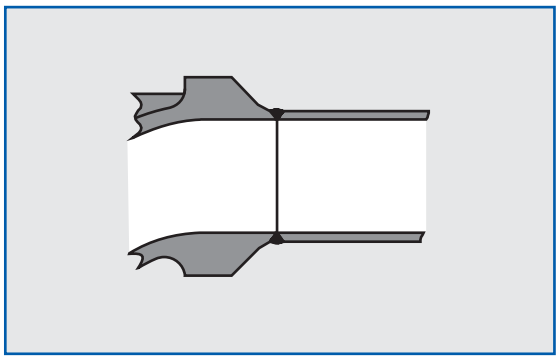

Fig. 8: Buttweld, (BW)

Table III: End Connections

End Connections	Valve Size (inches)	ANSI Class
Integral Flange Steel & Alloys	1/2 - 48	150
	1/2 - 48	300 - 600
	1/2 - 24	900 - 2500
NPT	1/2 - 2	150 - 600
	1/2 - 2	900 - 2500
Socketweld (SW)	1/2 - 2	150 - 600
	1/2 - 2	900 - 2500
Buttweld (BW)	1/2 - 4	150 - 600
	6 - 36	150 - 600
	1/2 - 24	900 - 2500

In accordance to ANSI/ISA S75.03 1983.

OpGL
Gaskets

The OpGL has been designed with the bonnet and seat ring gaskets fully retained. Since the bonnet bottoms metal-to-metal in the body, the bonnet gasket compression is determined by the depth of the gasket step on the bonnet which is machined to provide the compression required by the gasket manufacturer.

When the bonnet is fully installed, pressure is transmitted through the seat retainer to secure the seat ring in position

The body, seat retainer and seat ring are all machined to close tolerances to provide the proper gasket compression. Unlike the bonnet, the seat ring does not bottom in the body, allowing this small clearance to compensate for manufacturing tolerances and thermal expansion.

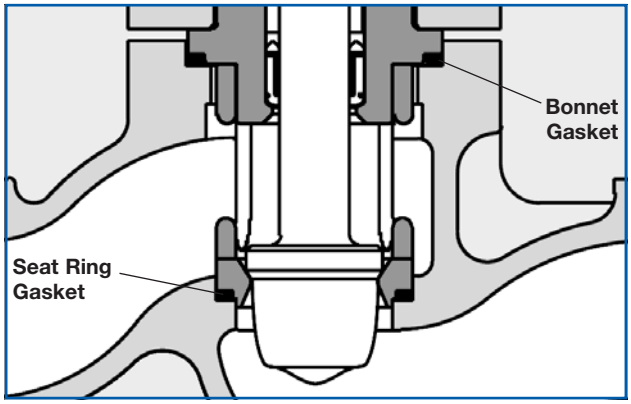

Figure 9: Body Gasket Unbalanced Trim

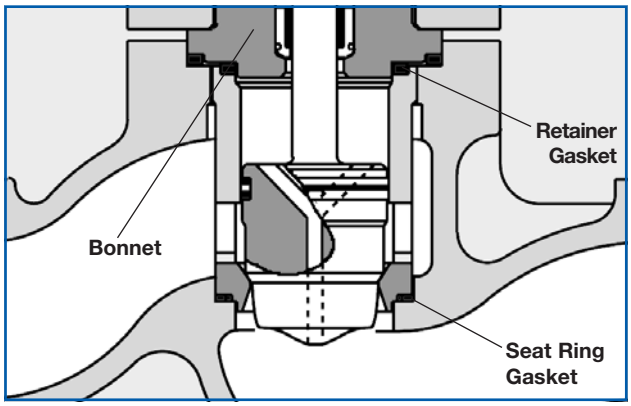

Figure 10: Body Gasket Balance trim

Table IV: Gasket Specifications

	Type	Gasket Material	Maximum Gasket Temperature		Minimum Gasket Temperature	
			°F	°C	°F	°C
Standard	Flat	Teflon (TFE)	350	177	-200	-130
Gaskets	Spiral Wound	304 SS/ AFG	750	400	-20	-30
	Spiral Wound	316 SS/ AFG	1000	538	-20	-30
Alternate	Flat	AFG	600	318	-20	-30
Gaskets	Flat	KEL-F	350	177	-320*	-196*
	Flat	Teflon (FEP)	400	204	-320	-196
	Flat	Grafoil**	1500**	816**	-320	-196
	Spiral Wound	316 SS/ Grafoil**	1500**	816**	-320	-196
	Hollow O-ring	Inconel X-750	1500**	816**	-20*	-30*

* Lower Temperature on request
** Limited to 800°F (427 °C) for oxiding service

OpGL
Bonnet Types

Standard Bonnet

The OpGL standard bonnet is constructed of the same material as the body, and handles fluid temperatures from -20°F to 750°F (-30°C to 400°C) (See page 7 for packing limitations).

Extended Bonnet

The extended bonnet protects the packing from excessive heat or cold which may inhibit valve performance. It is constructed of carbon steel for temperatures from -20°F to 800°F (-30°C to 427°C) and of 304 or 316 stainless steel for temperatures from -150°F to 1500°F (-100°C to 816°C).

Cold Box Extended Bonnet

The cold box extended bonnet permits stagnated, moderate temperature gas to form in the bonnet, which protects the packing from the service fluid. It is usually manufactured from 304 or 316 stainless steel to handle fluid temperatures down to -423°F (-253°C). Standard construction consists of stainless steel bonnet flange and bolting

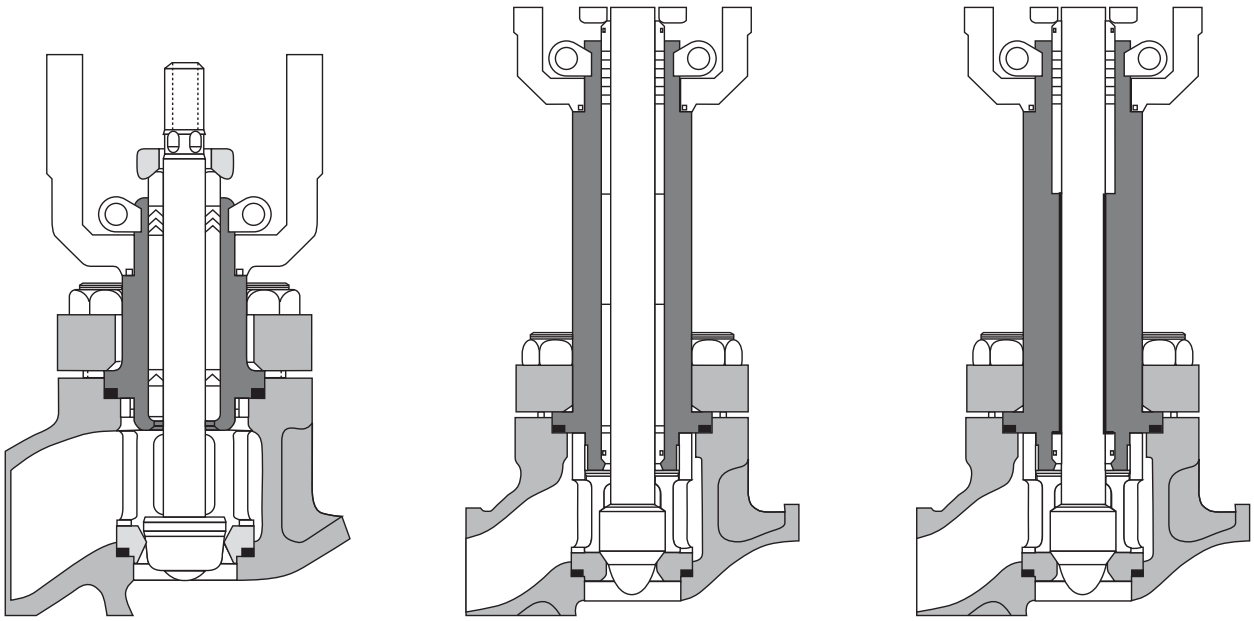

Standard Bonnet **Extended Bonnet** **Cold Box Extended Bonnet**

Figure 11: Bonnet Types for OpGL

Table V : Materials: Bonnet Flanges, Screws

Valve size (inches)	Standard Bonnet Flange	Optional Flange	Cap Screws Standard	Cap Screws Optional
1/2 to 3 Class 150-600	Carbon Steel	Stainless Steel (1) Same Body Alloy Material	SAE Grade 5	SS. Series 300 B7-2H Stainless steel (4) 304 and 316 (3,4)
4 Class 150-600 6 and above Class 150-500 All pressure class	Carbon Steel	Stainless Steel (1) Same Body Alloy Material	B-7; 2H (2)	Stainless steel 304 and 316 (3,4)

(1) When Pressure and temperature exceeds standard limitations for flanges and bolting constructed in carbon steel, and B7-2H, alloy material is required.
(2) Limit temperature from -20°F to 800°F (-29°C to 427°C). See for body temperature limitations.
(3) Limit temperature from -428 to 1500°F (-253°C to 816°C). See for body temperature limitations.
(4) Other materials are dependable on design configurations.

OpGL
Packing and Guiding

Packing Box

Standard Optimux packing boxes are deeper than most conventional types, providing the following advantages:

1. Wide spacing between the wiper set and the main upper packing set. The upper set is positioned far enough away from the wiper set to avoid contact with any part of the plug stem which has been exposed to the flow medium.
2. Two widely spaced stem guides, when used with the large plug stem diameter, provide exceptional guiding. The upper stem guide also acts as a packing follower. The lower guide is situated close to the plug head for additional guiding support.

Table VI: Guides Material

Standard Material	Maximum Temperature		Minimum Temperature		Maximum Pressure
	˚F	˚C	˚F	˚C	
Grafoil lined Stainless Steel[6]	1500	816	-320	-196	1000 psig up to 2 inch. 600 psig 3 and 4 inch. 500 psig 6 inch. and above
Glass-loaded	350	177	-50	-45	150 psig @ 100˚F
Teflon-lined SS	350	177	-423	-253	100 psig @ 350˚F
Solid Bronze	500	260	-423	-253	Same as the body
Solid Stellite	1500	816	-423	-253	Same as the body

Table VII: Packing, Temperature Limitations

ANSI Class	Material	Standard Bonnet (1)		Extended Bonnet (2)	
		˚F	˚C	˚F	˚C
150-600	Teflon TFE	-20 to 450	-28 to 232		
	Braided PTFE[3] Glass-filled Teflon	-20 to 500	-28 to 260	-150 to 600[2]	-28 to 316
150-600	APFI Asbestos[5]	-20 to 750[4]	-28 to 398	-20 to 1200	-28 to 649
150-600	Grafoil[6]	-20 to 750[4]	-28 to 398	-20 to 1500	-28 to 816
900-2500	Teflon TFE	-20 to 450	-28 to 232		
	Teflon PTFE Glass-filled Teflon	-20 to 500	-280 to 260	-150 to 700[2]	-101 to 371
900-2500	APFI Asbestos[5]	-20 to 800	-28 to 426	-20 to 1200	-28 to 649
900-2500	Grafoil[6]	-20 to 800	-28 to 426	-20 to 1500	-28 to 816
150-600	PTG	-20 to 450	-28 to 232	-20 to 600	-28 to 316
150-600	PT	-20 to 450	-28 to 232	-20 to 600	-28 to 316
150-600	PTXT	-20 to 550	-28 to 288	-20 to 700	-28 to 371
900-2500	PTG	-20 to 450	-28 to 232	-20 to 700	-28 to 371
900-2500	PT	-20 to 450	-28 to 232	-20 to 700	-28 to 371
900-2500	PTXT	-20 to 550	-28 to 288	-20 to 800	-28 to 426

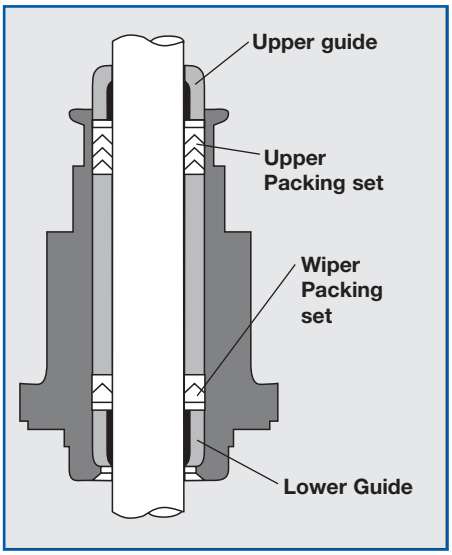

Figure 12: Teflon V-Ring Typical Arrangement

(1) ANSI B16.34 specifies acceptable pressure temperature limits for pressure retaining materials.

(2) When used with adequate body and Teflon TFE Bonnet materials.

(3) PTFE can be used in temperatures down to -423°F (-253°C).

(4) Sizes from 8 to 12 inches class ANSI 150-600 and 3 to 12 inches, class ANSI 900-2500 can be used in temperatures up to 850°F (455°C).

(5) Asbestos free packing. High temperature packing.

(6) Do not use Grafoil above 800°F (427°C) in oxiding service such as air or oxygen.

OpGL
Fugitive Emission Control

PT Packing

When temperature exceeds that specified for the standard V-rings or when a high temperature are expected, PT packing set is recommended.

As a cost efficient response to the EPA regulations, the PT packing set provides a typical fugitive emission rate lower than 10 ppm, becoming significantly reliable and more economical than metal bellows seal systems.

PT packing can be installed in all Optimux's rotary and globe control valves. It was designed to achieve a long-life expectancy eliminating the needs for packing set retightening, as with live load packing mechanisms.

PT packing set is also provided in a fire-safe version to prevent leaks through the shaft in case of fire, according to the API 607 standards.

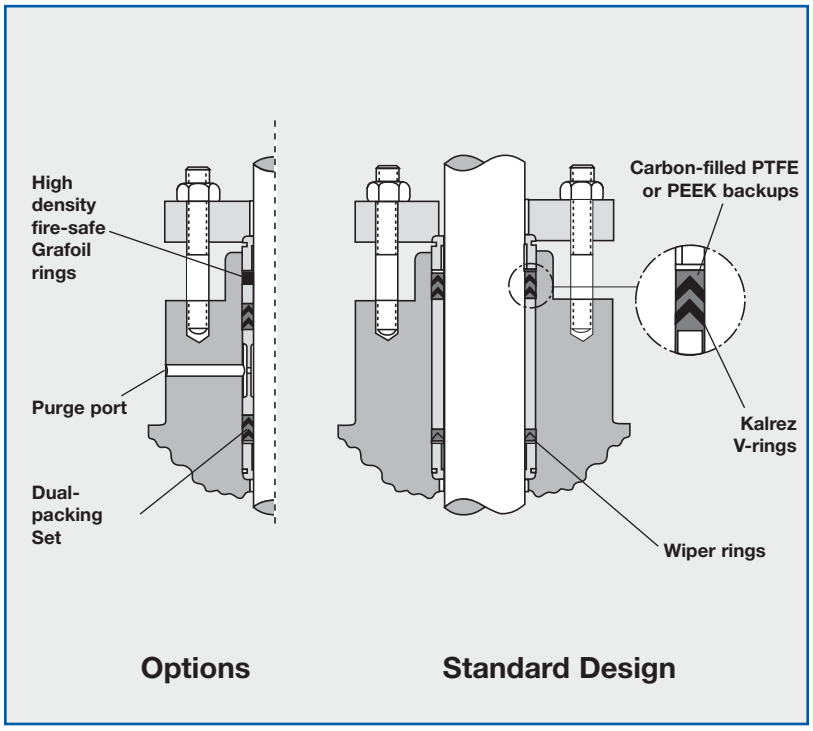

Figure 13: PT Packing Set

Guard Master™ Metal Bellow Seals

Today more than ever, environmental regulations and plant safety are critical concerns for industrial plants all over the world. The OpGL's Guard Master™ metal bellow seal when installed in our OpGL ensures years of safe and reliable operation in hazardous processes.

Our metal bellow seals are designed and fabricated using Inconel as a standard and with few welding points to provide a more compact, flexible and lasting bellow, able to provide more than 6 million cycles and withstand process temperatures of -380 to 1,120 F ,and pressures up to 1,300 psi.

A monitoring port is available on one side of the bonnet to facilitate continuous or eventual sample taking.

Guard Master™ kits are available to easily retrofit installed valve sub-assemblies that need to be upgraded to higher EPA standards.

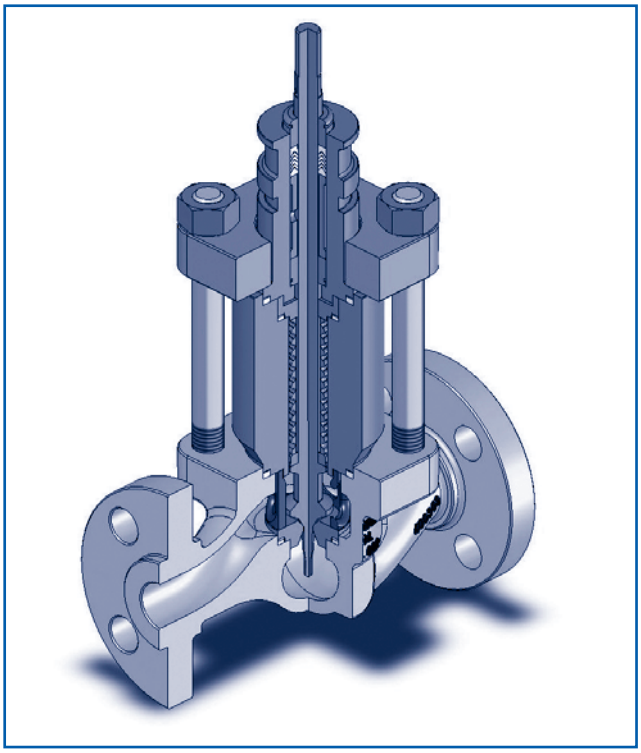

Figure 14: Guard Master™

OpGL
Flow Characteristics

Equal Percentage

Equal percentage is the characteristic most commonly used in process control. The change in flow per unit of valve stroke is directly proportional to the flow occurring just before the change is made. While the flow characteristic of the valve itself may be equal percentage, most common loops will produce an installed characteristic approaching linear when the overall system pressure drop is large relative to that across the valve.

Linear

Linear inherent characteristic produces equal changes in flow per unit of valve stroke regardless of plug position. Linear plugs are used on those systems where the valve pressure drop is a major portion of the total system pressure drop.

Quick Open

Quick open plugs are used for on-off services and are designed to produce maximum flow quickly.

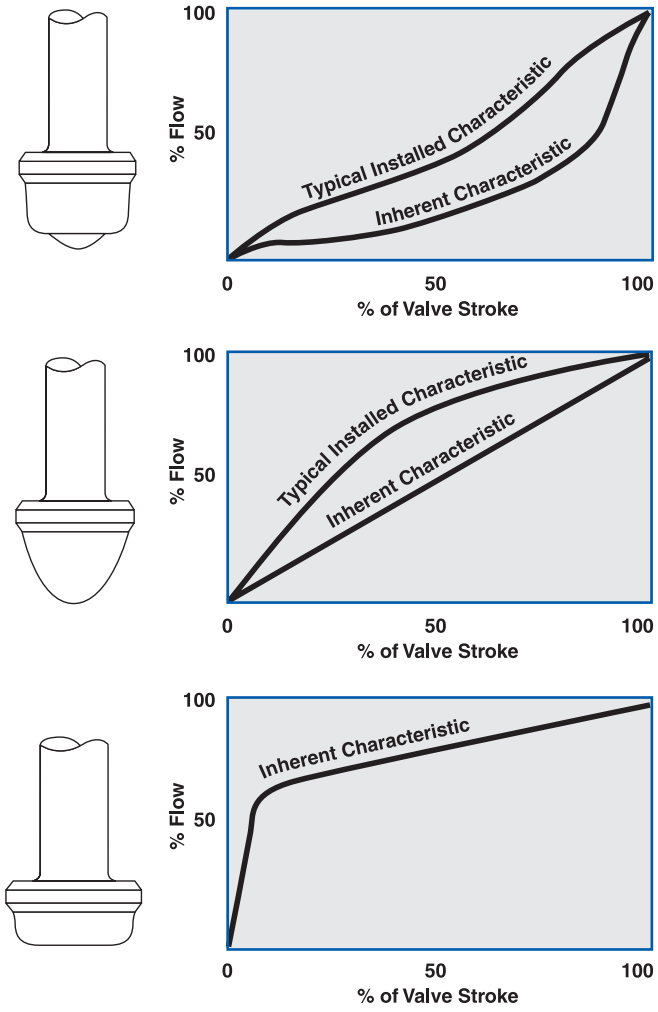

Figure 15: Flow Characteristics

Trim Types

Two different trim types are available: standard full area trim which provides maximum Cv. Reduced trim in a wide variety of sizes when lower Cv's and large bodies are required. In addition integral trim that uses a special seat machined into the body and an oversized plug to provide additional Cv beyond the capabilities of standard trim can be furnished.

OpGL valves can be easily converted from one trim type to another since all seat rings and plugs within a given size and pressure class are completely interchangeable. Integral trim is available by removing the seat ring and by changing the plug.

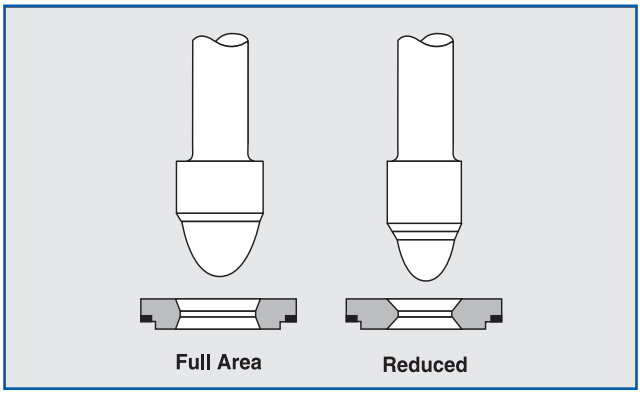

Figure 16: Typical Trim Types

OpGL
Trim, Seats

OpGL trims are designed to avoid the difficulties associated with screwed-in seats and cage-guiding. Since the seat ring is not screwed-in but clamped into the body by the bonnet and seat retainer, removal of the seat is easy even under extremely corrosive conditions.

Unlike cage-guided trims, which easily gall and stick, OpGL plugs are double stem guided, avoiding contact between the seat retainer and plug. Because no contact is made with the plug, the retainer can be constructed of stainless steel rather than costly hard materials. The flow characteristic is determined by the plug contour, rather than by the openings in the retainer. Optional noise attenuation trims are available to effectively improve noise level reduction in OpGL valves.

For very high pressure drops, pressure-balanced trims are used to reduce the thrust necessary to stroke the plug by reducing the trim off-balance area. Flow direction is under the plug for fail-closed and over the plug for fail-open.

The seal area less the stem area is designed to be slightly larger than the seat area, thus the plug is off-balance to close for flow under the seat and off-balance to open for flow over the seat.

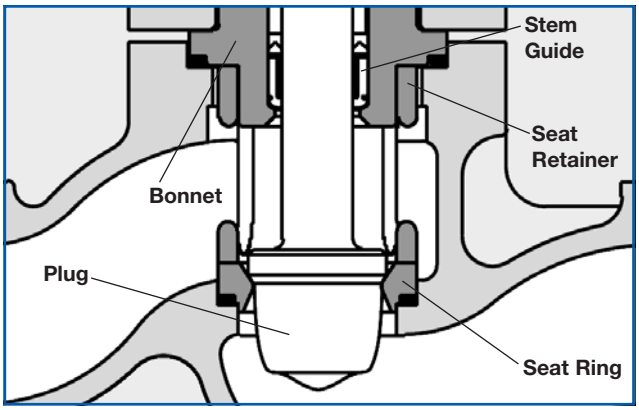

Figure 17: Standard Trim

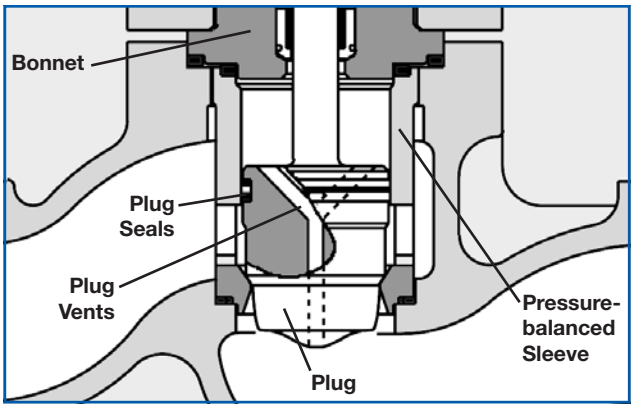

Figure 18: Balanced Trim

Seats

Metal Seats

Metal seated OpGL handles Class V shutoff (ANSI B16.104; 1976-FCI 70-2). This class calls for maximum permissible seat leakage of 0.01% of rated valve capacity.

This exceptional seat tightness is obtained by aligning the seat ring with the plug during assembly. Additional seat tightness using metal seats is available as an option.

Table VIII: Plug Seals Temperature Range for Pressure-Balance Trim

Teflon Seal	-320˚F @ full body rating or 300˚F @ 150 psig
Ni-resist Piston Rings	-22˚F to 800˚F
Buna-N O-rings	-60˚F to 250˚F
Rene 41	800˚F to 1600˚F
Spring-reinforced TFE	-365˚F to 575˚F
Viton	-40˚F to 437˚F

Soft Seats

The OpGL soft seat is used in applications requiring ANSI Class VI "bubble-tight" shutoff.

It's design consists of an elastomer sandwiched between two metal pieces. The assembled soft seat is interchangeable with the hard seat for a given size and pressure rating. Inserts are often constructed of Teflon, therefore, maximum temperature should be below 150°C at 20 Barg.

For temperatures below -65°C, Teflon soft seats can be used in high pressure applications.

OpGL
Trim, Materials

Standard plug and seat ring material is 316 stainless steel, except in the case of special alloy bodies where trims are sometimes furnished in the same material as the body. A wide variety of fluids are successfully handled by stainless steel trim parts. Nevertheless, as a general rule hardened trims must be used for all chocked flow conditions or for temperatures above 600°F (316°C).

CVD-5B Hardening Process

In addition to all the traditional and commonly used hardening processes and materials, Trimteck successfully introduced CVD-5B, a chemical diffusion hardening process which imparts RC 72 hardness to 316 and 416 SS components, including valve bodies.

CVD-5B is a proven, excellent choice for abrasive and corrosive process applications such as mining slurries, pulp & paper, brines, and multi-phase tough fluids, such as crude/water/sand, brine/sand/steam (geothermal applications), and others.

Table IX Wear and Galling Resistance of Material Combinations

	304 stainless steel	316 stainless steel	Bronze	Inconel 600	Monel 400	Hastelloy B	Hastelloy C	Titanium 75A	Nickel	Alloy 20	416 Hard.	440 Hard.	17-4 PH	Stellite	NDE*	Cr. Plate	Al. Bronze
304 stainless steel	P	P	G	P	P	P	G	P	P	P	G	G	G	G	G	G	G
316 stainless steel	P	P	G	P	P	P	G	P	P	P	G	G	G	G	G	G	G
Bronze	G	G	E	E	E	E	E	E	E	E	G	G	G	G	G	G	G
Inconel 600	P	P	E	P	P	P	G	P	G	G	G	G	G	G	G	G	E
Monel 400	P	P	E	P	P	P	G	G	G	G	G	G	G	E	G	G	E
Hastelloy B	P	P	E	P	P	P	G	G	E	G	G	G	G	E	G	E	E
Hastelloy C	G	G	E	G	G	G	G	G	G	G	G	G	G	E	G	E	E
Titanium 75A	P	P	E	P	G	G	G	P	G	G	G	G	G	E	G	G	E
Nickel	P	P	E	G	G	E	G	G	P	P	G	G	G	E	G	G	E
Alloy 20	P	P	E	G	G	G	G	G	P	P	G	G	G	E	G	G	E
416 Hard.	G	G	G	G	G	G	G	G	G	G	G	G	G	E	E	E	E
440 Hard.	G	G	G	G	G	G	G	G	G	G	E	G	E	E	E	E	E
17-4 PH	G	G	G	G	G	G	G	G	G	G	G	E	P	E	E	E	E
Stellite	G	G	G	G	E	E	E	E	E	E	E	E	E	E	E	E	E
NDE*	G	G	G	G	G	G	G	G	G	G	E	E	E	E	P	E	E
Cr. Plate	G	G	G	G	G	E	E	G	G	G	E	E	E	E	E	P	P
Al. Bronze	G	G	G	E	E	E	E	E	E	E	E	E	E	E	E	E	P

* Electrolytic Nickel Coating

E: Excellent, B: Good, P: Poor

Table X : Pressure Differential (psi) Requiring Hardened Seating Surfaces

Valve Size (inches)	Gases (clean)				Steam (superheated)				Steam (saturated)				Water				Process Fluids (general)			
	Control		On-Off		Control		On-Off		Control		On-Off		Control		On-Off		Control		On-Off	
	Psi	Bar	Psi	Bar	Psi	Bar	Psi	Bar	Psi	Bar	Psi	Bar	Psi	Bar	Psi	Bar	Psi	Bar	Psi	Bar
1/2 a 11/2	600	41	900	62	300	21	600	41	100	7	200	14	175	12	250	17	175	12	250	17
2 - 3	350	24	600	41	200	14	300	21	25	2	50	4	150	11	200	14	150	11	200	14
4 - 6	200	14	300	21	100	7	150	11	All applications		25	2	100	7	125	9	75	5	125	9
8 - 12	125	9	175	12	50	4	100	7	All applications				50	4	100	7	50	4	100	7

Table XI: Trim Material Characteristics

Trim Material	Hardness Rockwell C	Impact Strength	Corrosion Resistance	Maximum Temp. Recomm.		Erosion Resistance	Abrasion Resistance
				ºF	ºC		
316 Stainless steel	8	Excellent	Excellent	600	315	Fair	Fair
nº 6 Stellite	44	Excellent	Excellent	1500	815	Good	Good
416 Stainless steel	40	Good	Fair	800	426	Good	Good
17 - 4 PH H 900	44	Good	Good to Excellent	800	426	Good	Good
440 C Stainless steel	55-60	Fair	Fair	800	426	Excellent	Excellent
K Monel	32	Good	Good to Excellent	600	315	Fair to Good	Good
Tungsten Carbide	72	Fair	Good on bases Poor on acids	1200	648	Excellent	Excellent
CVD-5B	72	Excellent	Good	1200	648	Excellent	Excellent

OpGL
Standard Construction Materials

Table XII: Packing

Configurations	Standard: twin seal Vacuum seal
Materials	Teflon V-rings, Teflon, Teflon AFP* AFP/Inconel wire, glass-filled Teflon Grafoil and other materials as required
Lubrication (optional)	Lubricator with integral isolation valve Lubricator and isolation valve

Table XIII: Guides

Type	Double-top stem guide
Materials	Glass-filled Teflon, Grafoil, solid Stellite, solid Bronze, other materials as required

Table XIV: Gaskets

Types and Materials	Spiral wound: 304 or 316 Stainless steel/ asbestos-free; Teflon, Grafoil, Flat: Teflon, soft metal Metal O-ring: Inconel X750/ silver plated

Table XV: Body Materials

Sizes	1/2 - 48 inch; class 150 thru 600 1/2 - 24 inch; class 900 thru 2500 1/2 - 12 inch; class 4500
Forms	Globe, angle, 3 way
ANSI Ratings	Class 150, 300, 600, 900, 1500, 2500
Materials	Carbon steel, Stainless steel, Monel Nickel, Chrome-Moly, Titanium, Alloy 20, Bronze, hastelloy B, Hastelloy C, other materials
End connections	Integral flange: all sizes NPT: 1/2 - 2 inches Grayloc: all sizes Socketweld: 1/2 - 4 inch

Table XVI: Trim

Flow Characteristics	Equal percentage, linear, quick open	
Materials	316 Stainless steel 304 Stainless steel 347 Stainless steel 416 Stainless steel Hastelloy B Hastelloy C	Alloy 20 Nickel Titanium Monel 17-4 PH 440 C
Hardened Seating Surfaces	Materials: nº 6 stellite, CVD-5B Types: seat surface, full contour, full bore, lower guide area	
Soft Seat	TFE Teflon, FEP Teflon, KEL-F, polyurethane, PEEK	
Balanced Trim	Sizes: 2 inches and above Seals type: Elastomer, Metal	

Table XVII: Bonnet Materials

Types	Standard, extended, special length extended, bellows seal, cryogenic extended
Flanges	Separable
Materials	Bonnet: Same as body Bellows: Stainless steel, other material as required Bellows Housing: carbon steel, 316 stainless steel, other materials as required Bonnet Flange: carbon steel, 316 stain less steel, other materials as required

Name Plate

Valves are fitted with stainless steel name plate, as the example illustrated below.

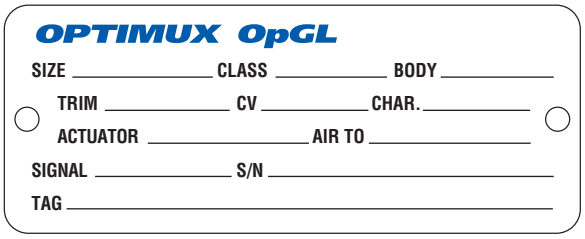

OpGL

Flow Capacity; C_V

Trim: Unbalanced
Body Rating: 150-300-600
Trim Characteristics: Equal Percentage
Flow Direction: Flow Over

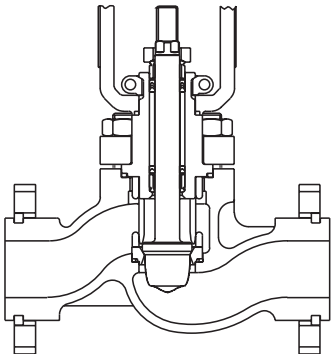

Table XVIII: Flow Capacity, C_V

Size (inch)	Trim nº	Stroke (inch)	F_L@ 100%	C_V at Percent Open										
				100	90	80	70	60	50	40	30	20	10	5
1/2	0.50	0.75	0.83	5.1	4.7	3.7	2.6	1.88	1.38	0.91	0.56	0.33	0.25	0.183
	0.38	0.75	0.82	3.8	3.4	2.5	1.66	1.25	0.86	0.50	0.31	0.192	0.129	0.108
	0.31	0.75	0.81	2.9	2.6	1.79	1.24	0.96	0.59	0.34	0.22	0.152	0.097	0.080
	0.25A	0.75	0.81	1.95	1.61	1.09	0.81	0.56	0.37	0.23	0.143	0.090	0.060	0.043
	0.25B	0.75	0.82	1.15	1.12	0.79	0.51	0.36	0.23	0.153	0.105	0.076	0.068	0.051
	0.12A	0.50	0.81	0.46	0.45	0.38	0.27	0.168	0.103	0.072	0.043	0.026	0.015	0.013
3/4	0.72	0.75	0.85	9.5	9.0	7.6	5.6	3.9	3.2	2.3	1.62	1.00	0.63	0.50
	0.62	0.75	0.83	9.1	8.4	6.6	4.6	3.0	2.3	1.58	0.95	0.59	0.32	0.24
	0.50	0.75	0.82	6.4	5.8	4.6	3.0	1.95	1.52	0.97	0.62	0.37	0.24	0.196
	0.38	0.75	0.82	4.3	3.8	2.9	1.77	1.40	0.88	0.47	0.29	0.167	0.107	0.082
	0.31	0.75	0.82	2.9	2.6	1.63	1.21	0.87	0.58	0.31	0.20	0.149	0.092	0.070
	0.25A	0.75	0.81	2.0	1.85	1.23	0.92	0.58	0.35	0.21	0.141	0.088	0.060	0.046
	0.25B	0.75	0.81	1.27	1.25	0.95	0.63	0.37	0.23	0.130	0.086	0.051	0.024	0.017
	0.12A	0.50	0.82	0.47	0.48	0.37	0.24	0.151	0.088	0.056	0.036	0.018	0.006	0.005
1	0.81	0.75	0.87	15.5	14.1	11.2	8.0	4.9	3.3	2.8	2.1	1.60	1.06	0.78
	0.72	0.75	0.85	13.4	11.7	8.9	6.1	3.9	3.1	2.3	1.64	1.11	0.70	0.53
	0.62	0.75	0.83	10.2	8.7	6.5	4.2	2.7	2.3	1.52	0.98	0.61	0.35	0.28
	0.50	0.75	0.82	6.5	5.7	4.4	2.9	1.95	1.53	1.09	0.72	0.46	0.26	0.199
	0.38	0.75	0.82	4.1	3.4	2.3	1.53	1.30	0.84	0.51	0.33	0.22	0.139	0.113
	0.31	0.75	0.81	2.9	2.4	1.63	1.15	0.92	0.61	0.35	0.20	0.137	0.088	0.063
	0.25A	0.75	0.81	1.89	1.55	1.09	0.83	0.56	0.31	0.21	0.133	0.083	0.056	0.040
	0.12A	0.50	0.81	0.47	0.46	0.29	0.22	0.157	0.113	0.085	0.063	0.043	0.026	0.017
1 1/2	1.25	1.00	0.86	27	25	21	15.3	10.1	6.6	4.9	3.5	2.3	1.54	1.22
	1.00	0.75	0.85	19.0	17.2	14.4	10.8	7.1	4.5	3.3	2.4	1.56	1.05	0.82
	0.81	0.75	0.82	12.9	11.4	8.9	6.3	4.0	2.6	1.77	1.06	0.69	0.33	0.27
	0.62	0.75	0.83	9.3	8.0	6.2	4.4	3.0	2.0	1.36	0.76	0.47	0.26	0.20
	0.38	0.75	0.79	3.6	2.8	1.92	1.41	1.23	0.86	0.58	0.30	0.180	0.108	0.084
2	1.62	1.50	0.89	46	41	34	25	16.2	11.3	9.0	5.9	3.8	2.6	2.4
	1.25	1.00	0.87	31	27	22	15.9	10.2	6.6	5.2	3.6	2.3	1.55	1.26
	1.00	0.75	0.83	21	18.6	15.4	11.3	7.5	4.7	3.3	2.5	1.59	1.07	0.85
	0.81	0.75	0.82	14.3	12.8	10.2	7.3	4.6	2.9	2.3	1.52	0.98	0.67	0.53
	0.62	0.75	0.79	8.9	7.9	6.1	4.2	2.6	2.0	1.42	0.88	0.52	0.31	0.25
	0.38	0.75	0.79	3.5	3.2	2.6	1.73	1.15	0.91	0.55	0.34	0.22	0.149	0.123
3	2.62	2.00	0.87	104	95	85	76	60	38	22	16.2	10.2	5.8	3.9
	2.00	1.50	0.83	78	73	66	55	40	24	13.3	8.8	6.3	3.7	2.9
	1.62	1.50	0.81	52	46	36	24	15.8	10.5	8.4	5.7	3.6	2.5	1.99
	1.25	1.00	0.78	31	27	22	15.2	10.1	6.5	4.9	3.4	2.2	1.42	1.17
4	3.50	2.50	0.86	179	169	154	130	96	57	35	26	19.8	12.9	10.2
	2.62	2.00	0.82	133	124	111	89	63	39	24	16.4	11.4	7.4	6.0
	2.25	2.00	0.83	104	96	83	63	40	24	15.0	11.7	7.4	4.6	3.8
	1.62	1.50	0.79	55	48	37	25	16.0	10.5	8.4	5.7	3.6	2.5	2.0
6	5.00	3.00	0.85	355	333	302	264	202	125	59	33	20	13.9	13.4
	3.50	2.50	0.83	230	215	192	152	102	58	35	23	17.4	11.1	8.9
	3.00	2.00	0.81	192	154	121	102	61	38	26	17.0	12.0	8.0	5.0
	2.62	2.00	0.78	141	133	118	95	65	37	22	16.5	11.0	6.9	5.7
8	6.25	4.00	0.86	606	564	499	413	305	181	107	73	55	34	27
	5.00	3.00	0.80	461	428	369	290	202	125	59	33	20	14.0	13.0
	3.50	2.50	0.83	250	233	205	161	110	61	34	21	13.1	7.0	5.1
	2.62	2.00	0.82	144	135	119	95	65	37	22	16.0	11.0	7.0	6.0
10	8.00	4.00	0.85	897	843	762	656	525	371	192	99	60	42	34
	6.25	4.00	0.82	690	635	548	425	305	181	107	73	49	34	27
	5.00	3.00	0.83	495	455	385	290	202	125	59	33	20	14.0	13.0
12	9.50	4.00	0.85	1310	1215	1080	920	697	428	230	153	108	73	55
	7.38	4.00	0.82	960	884	750	585	421	250	149	101	68	46	36
	6.25	4.00	0.83	770	712	589	440	305	181	107	73	49	34	27

OpGL
Flow Capacity; C_V

Trim: Unbalanced
Body Rating: 150-300-600
Trim Characteristics: Equal Percentage
Flow Direction: Flow Under

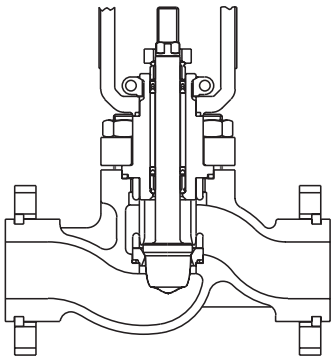

Table XIX: Flow Capacity, C_V

Size (inch)	Trim nº	Stroke (inch)	F_L@ 100%	C_V at Percent Open										
				100	90	80	70	60	50	40	30	20	10	5
1/2	0.50	0.75	0.91	4.9	4.7	3.9	2.3	1.64	1.07	0.72	0.45	0.30	0.20	0.165
	0.38	0.75	0.87	3.5	3.1	2.3	1.5	1.00	0.68	0.41	0.27	0.178	0.130	0.11
	0.31	0.75	0.89	2.6	2.3	1.68	1.10	0.72	0.47	0.29	0.21	0.152	0.108	0.086
	0.25A	0.75	0.88	1.78	1.57	1.03	0.67	0.43	0.27	0.178	0.109	0.075	0.049	0.037
	0.25B	0.75	0.88	1.33	1.31	0.91	0.56	0.37	0.22	0.151	0.104	0.077	0.066	0.056
	0.12A	0.50	0.89	0.44	0.43	0.41	0.257	0.160	0.100	0.067	0.0443	0.029	0.017	0.015
3/4	0.72	0.75	0.85	9.5	8.9	7.5	5.5	3.2	2.2	1.39	0.94	0.67	0.43	0.34
	0.62	0.75	0.90	8.6	8.5	6.4	4.4	2.8	1.80	1.24	0.76	0.46	0.27	0.23
	0.50	0.75	0.91	6.0	5.7	4.7	2.9	1.85	1.19	0.76	0.47	0.30	0.181	0.144
	0.38	0.75	0.88	3.8	3.5	2.7	1.75	1.12	0.71	0.43	0.27	0.163	0.098	0.084
	0.31	0.75	0.89	2.7	2.4	1.63	1.09	0.69	0.45	0.26	0.180	0.125	0.080	0.061
	0.25A	0.75	0.89	1.90	1.82	1.28	0.84	0.48	0.31	0.195	0.125	0.080	0.052	0.038
	0.25B	0.75	0.88	1.23	1.22	0.79	0.52	0.33	0.192	0.117	0.067	0.036	0.014	0.007
	0.12A	0.50	0.88	0.46	0.46	0.45	0.27	0.159	0.092	0.057	0.034	0.015	0.004	0.003
1	0.81	0.75	0.89	13.4	12.2	9.2	6.6	4.1	2.8	1.86	1.28	0.94	0.66	0.56
	0.72	0.75	0.90	12.2	11.3	8.0	5.6	3.5	2.3	1.54	1.03	0.69	0.46	0.42
	0.62	0.75	0.91	9.7	9.0	6.1	3.9	2.5	1.68	1.10	0.70	0.45	0.29	0.25
	0.50	0.75	0.89	6.5	5.9	4.5	2.7	1.79	1.18	0.77	0.47	0.29	0.194	0.167
	0.38	0.75	0.92	3.9	3.4	2.3	1.50	0.99	0.66	0.43	0.29	0.194	0.130	0.113
	0.31	0.75	0.89	2.8	2.4	1.61	1.06	0.71	0.47	0.26	0.176	0.123	0.079	0.062
	0.25A	0.75	0.91	1.84	1.61	1.16	0.72	0.47	0.30	0.190	0.140	0.084	0.059	0.047
	0.25B	0.75	0.92	1.20	1.06	0.74	0.47	0.32	0.180	0.118	0.084	0.049	0.033	0.023
	0.12A	0.50	0.91	0.51	0.50	0.33	0.196	0.127	0.086	0.062	0.040	0.025	0.014	0.012
1 1/2	1.25	1.00	0.89	30	28	24	15.9	10.7	6.8	4.4	2.9	1.87	1.27	1.09
	1.00	0.75	0.92	22	22	16.6	10.8	6.6	4.5	3.0	1.89	1.31	0.90	0.78
	0.81	0.75	0.91	15.9	13.8	9.4	6.1	4.5	2.6	1.59	0.93	0.59	0.33	0.24
	0.62	0.75	0.88	10.1	8.3	6.3	5.3	3.2	1.92	1.09	0.78	0.43	0.27	0.173
	0.38	0.75	0.90	3.7	3.2	1.95	1.31	0.88	0.60	0.36	0.23	0.142	0.088	0.071
2	1.62	1.50	0.91	47	45	41	30	16.3	10.5	7.0	4.6	3.1	2.2	1.89
	1.25	1.00	0.89	30	29	24	15.5	10.0	6.4	4.3	2.8	1.85	1.24	1.07
	1.00	0.75	0.92	23	22	17.9	11.6	6.8	4.7	3.0	1.91	1.29	0.89	0.76
	0.81	0.75	0.91	16.0	15.7	11.5	7.2	4.7	3.0	1.94	1.24	0.85	0.56	0.49
	0.62	0.75	0.90	10.0	9.0	6.7	4.5	2.7	1.79	1.15	0.74	0.44	0.28	0.23
	0.38	0.75	0.90	3.0	2.9	2.6	1.92	1.22	0.80	0.49	0.32	0.21	0.145	0.126
3	2.62	2.00	0.89	108	101	92	88	71	36	21	12.8	7.8	4.5	3.2
	2.00	1.50	0.90	82	77	71	63	43	25	13.6	8.7	5.2	3.3	2.6
	1.62	1.50	0.92	49	47	42	28	17.4	11.4	7.4	4.8	3.2	2.2	1.79
	1.25	1.00	0.88	32	31	25	16.1	10.5	6.9	4.4	2.9	1.88	1.27	1.11
4	3.50	2.50	0.91	195	183	168	156	114	57	36	24	15.3	10.6	8.4
	2.62	2.00	0.90	133	123	111	100	67	42	27	17.4	10.4	6.8	5.5
	2.25	2.00	0.89	98	90	81	67	41	26	16.5	10.4	6.3	4.2	3.5
	1.62	1.50	0.90	56	52	42	28	17.4	11.4	7.4	4.8	3.2	2.2	1.8
6	5.00	3.00	0.90	400	374	339	297	249	148	62	35	18.3	13.7	13.2
	3.50	2.50	0.89	224	202	176	152	114	65	41	26	16.4	10.8	8.5
	3.00	2.00	0.91	170	153	134	115	73	37	25	17.0	11.0	7.8	5.0
	2.62	2.00	0.90	130	119	106	93	68	37	23	15.0	8.9	5.6	4.6
8	6.25	4.00	0.91	691	643	589	497	334	184	115	76	46	28	24
	5.00	3.00	0.89	457	412	359	298	212	134	65	36	19.0	14.0	13.0
	3.50	2.50	0.90	245	220	196	161	114	65	41	26	16.0	11.0	9.0
	2.62	2.00	0.90	143	132	117	100	68	37	23	15.0	8.7	6.0	5.0
10	8.00	4.00	0.90	1013	921	817	723	603	424	191	112	70	41	32
	6.25	4.00	0.89	672	606	528	456	334	184	115	76	46	28	24
	5.00	3.00	0.91	482	434	378	298	212	134	65	36	19.0s	14.0	13.0
12	9.50	4.00	0.90	1410	1290	1140	960	766	534	269	158	99	58	45
	7.38	4.00	0.89	935	858	756	637	480	267	142	97	65	44	36
	6.25	4.00	0.91	750	683	612	508	334	184	115	76	46	28	24

OpGL

Flow Capacity; C_V

Trim: Unbalanced
Body Rating: 150-300-600
Trim Characteristics: Linear
Flow Direction: Flow Over

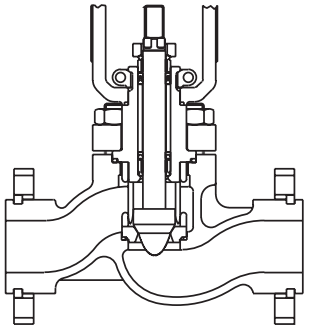

Table XX: Flow Capacity, C_V

Size (inch)	Trim nº	Stroke (inch)	F_L@ 100%	C_V at Percent Open										
				100	90	80	70	60	50	40	30	20	10	5
	0.50	0.75	0.87	5.6	5.4	5.2	4.8	4.3	3.8	3.2	2.52	1.72	0.84	0.56
	0.38	0.75	0.83	4.1	4.1	3.9	3.5	3.1	2.8	2.2	1.77	1.21	0.63	0.33
1/2	0.31	0.75	0.81	2.9	2.9	2.8	2.5	2.3	2.0	1.6	1.23	0.86	0.46	0.28
	0.25A	0.75	0.82	1.98	1.96	1.88	1.69	1.48	1.25	1.00	0.79	0.42	0.21	0.104
	0.25B	0.75	0.82	1.71	1.31	1.15	1.02	0.92	0.76	0.65	0.51	0.31	0.198	0.115
	0.12A	0.50	0.83	0.46	0.44	0.39	0.33	0.29	0.25	0.193	0.146	0.081	0.028	0.012
	0.72	0.75	0.85	10.1	9.9	9.6	9.2	8.8	8.1	7.2	5.4	3.6	1.54	0.67
	0.62	0.75	0.88	9.1	8.9	8.5	8.2	7.6	6.2	4.9	3.8	2.4	1.30	0.70
	0.50	0.75	0.88	6.9	6.6	6.1	5.5	4.8	4.0	3.3	2.4	1.68	0.74	0.42
3/4	0.38	0.75	0.83	4.3	4.3	4.0	3.5	3.1	2.7	2.1	1.63	1.06	0.49	0.23
	0.31	0.75	0.82	3.0	3.0	2.7	2.4	2.2	1.85	1.44	1.11	0.73	0.37	0.22
	0.25A	0.75	0.82	2.0	2.0	1.92	1.72	1.48	1.25	0.99	0.71	0.45	0.189	0.088
	0.25B	0.75	0.82	1.93	1.39	1.17	1.06	0.91	0.79	0.65	0.48	0.34	0.181	0.111
	0.12A	0.50	0.83	0.47	0.47	0.41	0.36	0.30	0.25	0.199	0.143	0.088	0.027	0.011
	0.81	0.75	0.87	17.6	17.0	16.3	15.3	13.7	10.9	8.4	6.2	3.7	1.90	0.93
	0.72	0.75	0.85	15.7	15.2	14.3	12.7	10.5	8.5	6.7	5.0	3.2	1.43	0.73
	0.62	0.75	0.83	12.0	11.5	10.6	9.0	7.7	6.2	4.9	3.8	2.4	1.33	0.84
1	0.50	0.75	0.84	6.8	6.5	5.9	5.2	4.4	3.7	3.0	2.4	1.63	0.83	0.49
	0.38	0.75	0.83	4.4	4.3	3.8	3.3	2.9	2.5	2.1	1.62	1.12	0.56	0.29
	0.31	0.75	0.81	2.9	2.9	2.6	2.3	2.1	1.79	1.43	1.13	0.75	0.33	0.21
	0.25A	0.75	0.82	1.90	1.90	1.75	1.58	1.43	1.16	0.97	0.80	0.48	0.24	0.110
	0.25B	0.75	0.83	1.58	1.26	1.07	1.00	0.92	0.77	0.71	0.54	0.35	0.21	0.108
	0.12A	0.50	0.83	0.49	0.48	0.41	0.36	0.30	0.26	0.22	0.156	0.102	0.055	0.036
	1.25	1.00	0.85	31	30	28	25	23	19.4	16.0	12.2	8.0	3.7	1.93
	1.00	0.75	0.82	21	21	19.6	18.0	16.1	13.8	11.2	8.5	5.5	2.6	1.30
1 1/2	0.81	0.75	0.80	14.9	14.5	13.9	12.9	11.4	9.6	7.7	5.7	3.7	1.90	1.10
	0.72	0.75	0.81	14.7	14.2	13.4	12.1	10.5	8.5	6.7	5.0	3.2	1.40	0.70
	0.62	0.75	0.79	12.0	11.5	10.6	9.0	7.7	6.2	4.9	3.8	2.4	1.30	0.70
	0.38	0.75	0.80	4.4	4.3	3.8	3.3	2.9	2.6	2.1	1.62	1.12	0.56	0.29
	1.62	1.50	0.87	56	54	51	48	43	36	29	22	13.9	6.5	4.1
	1.25	1.00	0.83	35	33	31	29	25	22	17.4	13.0	8.4	4.1	2.2
2	1.00	0.75	0.82	23	22	21	19.3	17.2	14.6	11.6	8.6	5.5	2.6	1.31
	0.81	0.75	0.84	15.4	14.9	14.1	12.9	11.4	9.6	7.7	5.7	3.7	1.91	1.11
	0.72	0.75	0.81	15.0	14.4	13.5	12.1	10.5	8.5	6.7	5.0	3.2	1.40	0.70
	0.62	0.75	0.79	12.0	11.5	10.6	9.0	7.7	6.2	4.9	3.8	2.4	1.30	0.70
	0.38	0.75	0.80	4.4	4.3	3.8	3.3	2.9	2.6	2.1	1.62	1.12	0.56	0.29
	2.62	2.00	0.86	116	113	110	105	97	83	71	56	38	17.5	9.7
3	2.00	1.50	0.84	79	77	73	69	62	54	44	33	22	12.7	7.5
	1.62	1.50	0.81	57	55	51	47	41	34	27	21	13.7	6.5	3.6
	1.25	1.00	0.82	37	35	32	29	25	22	17.4	13.0	8.4	4.1	2.2
	3.50	2.50	0.87	193	184	176	170	165	153	132	102	67	30	16.0
4	2.62	2.00	0.84	137	133	126	115	103	87	69	50	33	15.9	7.0
	2.25	2.00	0.81	117	108	99	89	78	66	54	41	28	14.0	6.0
	1.62	1.50	0.82	59	56	53	49	42	35	28	20	13.8	6.9	3.7
	5.00	3.00	0.85	453	437	413	383	346	302	254	199	126	61	34
6	3.50	2.50	0.83	247	235	220	202	182	159	133	103	70	36	18.0
	3.00	2.00	0.81	196	183	168	152	134	115	94	72	49	25	12.0
	2.62	2.00	0.82	162	150	135	121	103	87	69	50	33	16.0	7.0
	6.25	4.00	0.86	713	687	648	600	541	474	397	311	216	112	54
8	5.00	3.00	0.83	575	533	488	439	387	330	271	209	143	73	34
	3.50	2.50	0.81	298	274	248	221	193	163	132	102	67	30	16.0
	2.62	2.00	0.82	173	158	143	126	110	90	69	50	33	16.0	7.0
	8.00	4.00	0.85	1056	1014	963	900	824	732	621	490	340	174	88
10	6.25	4.00	0.82	739	711	675	624	562	492	404	305	202	99	53
	5.00	3.00	0.81	590	545	496	444	388	329	254	192	126	61	30
	9.50	4.00	0.86	1470	1430	1370	1280	1160	1020	850	660	494	259	124
12	7.38	4.00	0.81	946	918	877	825	750	654	544	356	212	68	13.9
	6.25	4.00	0.83	829	774	713	646	571	489	404	305	202	99	53

OpGL
Flow Capacity; C_V

Trim: Unbalanced
Body Rating: 150-300-600
Trim Characteristics: Linear
Flow Direction: Flow Over

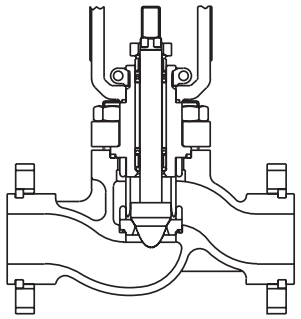

Table XXI: Flow Capacity, C_V

Size (inch)	Trim nº	Stroke (inch)	F_L@ 100%	C_V at Percent Open										
				100	90	80	70	60	50	40	30	20	10	5
	0.50	0.75	0.88	5.1	5.0	4.7	4.4	3.9	3.5	2.8	2.2	1.43	0.68	0.47
	0.38	0.75	0.90	3.6	3.5	3.3	3.0	2.6	2.2	1.75	1.34	0.86	0.34	0.24
1/2	0.31	0.75	0.89	2.7	2.5	2.3	2.1	1.80	1.52	1.20	0.92	0.57	0.29	0.166
	0.25A	0.75	0.88	1.71	1.70	1.64	1.42	1.26	1.01	0.82	0.61	0.38	0.20	0.096
	0.25B	0.75	0.85	1.05	1.02	0.91	0.84	0.75	0.64	0.52	0.40	0.26	0.150	0.090
	0.12A	0.50	0.85	0.42	0.43	0.40	0.34	0.29	0.25	0.194	0.133	0.088	0.038	0.019
	0.72	0.75	0.91	9.2	9.2	9.2	8.9	8.3	7.1	6.0	4.4	3.1	1.35	0.66
	0.62	0.75	0.89	9.0	8.8	8.5	8.1	7.1	6.1	4.7	3.6	2.3	1.20	0.70
	0.50	0.75	0.85	6.2	6.0	5.6	5.1	4.5	3.8	3.1	2.3	1.58	0.62	0.34
3/4	0.38	0.75	0.90	3.9	3.8	3.4	3.1	2.7	2.3	1.82	1.35	0.92	0.36	0.21
	0.31	0.75	0.89	2.8	2.7	2.5	2.2	1.85	1.56	1.23	0.92	0.56	0.23	0.147
	0.25A	0.75	0.89	1.93	1.91	1.76	1.57	1.34	1.12	0.88	0.61	0.39	0.168	0.090
	0.25B	0.75	0.88	1.05	1.02	0.91	0.84	0.75	0.64	0.52	0.40	0.26	0.150	0.090
	0.12A	0.50	0.85	0.46	0.44	0.41	0.35	0.30	0.25	0.20	0.140	0.081	0.034	0.017
	0.81	0.75	0.91	15.0	15.0	14.5	13.2	11.8	9.7	7.9	6.0	3.8	2.1	1.17
	0.72	0.75	0.93	13.0	12.7	11.9	10.5	9.1	7.6	5.8	4.4	2.6	0.98	0.56
	0.62	0.75	0.93	10.2	9.8	9.2	8.1	7.1	6.1	4.7	3.6	2.3	1.20	0.68
	0.50	0.75	0.90	6.7	6.4	5.9	5.2	4.6	3.8	3.0	2.2	1.42	0.63	0.34
1	0.38	0.75	0.91	4.0	3.8	3.5	3.1	2.6	2.1	1.74	1.27	0.86	0.37	0.20
	0.31	0.75	0.90	2.9	2.8	2.5	2.2	1.91	1.62	1.26	0.97	0.62	0.27	0.149
	0.25A	0.75	0.90	1.76	1.74	1.70	1.47	1.26	0.95	0.77	0.54	0.37	0.158	0.081
	0.25B	0.75	0.88	1.05	1.02	0.91	0.84	0.75	0.64	0.52	0.40	0.26	0.150	0.090
	0.12A	0.50	0.92	0.49	0.47	0.42	0.36	0.30	0.26	0.20	0.144	0.100	0.055	0.036
	1.25	1.00	0.89	32	30	29	28	26	23	19.1	15.0	10.6	5.4	3.0
	1.00	0.75	0.91	21	21	20	18.9	17.5	15.2	12.6	9.9	6.7	2.9	1.89
1 1/2	0.81	0.75	0.92	13.7	13.4	13.0	12.5	11.5	10.1	8.1	5.5	3.2	1.60	0.80
	0.72	0.75	0.91	13.0	12.7	11.9	10.5	9.1	7.6	5.8	4.4	2.6	1.00	0.60
	0.62	0.75	0.88	11.0	9.7	8.6	7.6	6.6	5.5	4.4	3.4	2.3	1.10	0.55
	0.38	0.75	0.90	4.1	3.6	3.2	2.8	2.4	2.0	1.60	1.20	0.82	0.41	0.20
	1.62	1.50	0.91	51	50	50	49	44	37	30	23	15.1	6.7	4.0
	1.25	1.00	0.88	35	34	31	29	26	22	17.8	13.6	9.1	3.7	2.4
	1.00	0.75	0.92	22	21	20	19.4	17.5	14.8	12.0	9.2	5.6	2.7	1.78
2	0.81	0.75	0.80	14.3	14.0	13.7	13.2	11.9	10.1	8.1	5.5	3.2	1.56	0.80
	0.72	0.75	0.90	13.0	12.7	11.9	10.5	9.1	7.6	5.8	4.4	2.6	1.00	0.60
	0.62	0.75	0.90	11.0	9.7	8.6	7.6	6.6	5.5	4.4	3.4	2.3	1.10	0.55
	0.38	0.75	0.90	4.1	3.6	3.2	2.8	2.4	2.0	1.60	1.20	0.82	0.41	0.20
	2.62	2.00	0.91	114	112	109	105	99	88	73	55	37	17.6	9.4
3	2.00	1.50	0.90	82	77	73	66	59	52	43	34	24	13.8	9.0
	1.62	1.50	0.89	52	50	46	42	37	33	29	22	15.2	6.5	3.6
	1.25	1.00	0.90	37	35	33	30	26	22	17.8	13.6	9.1	3.7	1.90
	3.50	2.50	0.90	195	187	177	165	151	134	113	89	62	32	16.0
4	2.62	2.00	0.92	134	128	118	106	92	80	65	53	35	16.0	7.8
	2.25	2.00	0.89	102	96	89	82	73	63	52	40	27	14.0	7.0
	1.62	1.50	0.88	53	50	46	42	37	32	29	22	15.2	7.3	3.8
	5.00	3.00	0.90	433	418	395	367	332	291	245	193	134	70	35
6	3.50	2.50	0.89	233	218	201	180	157	132	109	87	70	40	26
	3.00	2.00	0.91	182	173	160	143	125	108	88	68	49	25	15.0
	2.62	2.00	0.90	149	139	129	115	100	84	67	53	37	21	12.7
	6.25	4.00	0.90	681	657	620	575	520	456	383	301	210	109	55
8	5.00	3.00	0.91	481	456	426	392	352	306	255	197	135	68	34
	3.50	2.50	0.90	273	254	233	210	185	158	129	99	67	34	17.0
	2.62	2.00	0.90	166	156	144	128	111	92	74	55	38	22	14.0
	8.00	4.00	0.90	1056	1014	963	900	824	732	621	490	340	174	88
10	6.25	4.00	0.89	702	664	610	548	477	403	325	244	165	106	70
	5.00	3.00	0.89	557	518	476	429	378	323	257	190	136	69	34
	9.50	4.00	0.90	1400	1370	1310	1220	1110	980	820	639	480	252	124
12	7.38	4.00	0.89	983	928	858	771	669	561	451	339	233	149	85
	6.25	4.00	0.91	852	795	728	642	548	440	340	250	165	107	54

OpGL
Dimensions

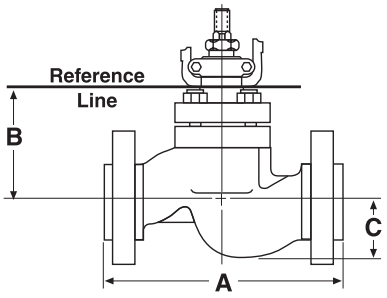

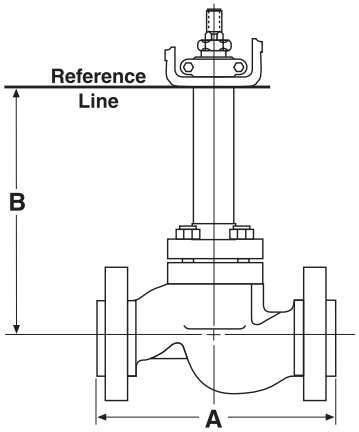

Table XXII: Valve Dimensions – Class 150, 300, 600

Body Size (Inch)	A						B				C		Space Needed for Disassembling Above Actuator	
	ANSI/ISA						Standard Bonnet		Extended Bonnet					
	Class 150		Class 300		Class 600									
	Inch	mm	Inch	mm	Inch	mm	Inch	mm	Inch	mm	Inch	mm	Inch	mm
1/2 & 3/4	7.3	184	7.6	194	8.1†	206†	3.8	97	8.3	212	1.5	38	2.5	64
1	7.3	184	7.8	197	8.3	210	3.8	97	8.3	212	1.8	44	2.5	64
1 1/2	8.8	222	9.3	235	9.9	251	5.2	132	9.7	246	2.3	59	4	102
2	10	254	10.5	267	11.3	286	5.4	138	9.9	252	2.3	57	4.5	114
3	11.8	298	12.5	318	13.3	337	6.8	172	12.3	312	3.4	86	5.8	147
4	13.9	353	14.5	368	15.5	394	8.4	214	13.9	354	5.2	133	7.5	190
6	17.8	451					10.1	256	15.6	395	5.5	139	10	254
6			18.6	473	20	508	12.3	311	17.8	451	5.8	146	10	254
8	21.4	543					12.5	318	18	457	7.1	180	10.9	277
8			22.4	568	24	610	14.4	365	19.9	505	7.5	190	11.4	290
10	26.5	673					14.1	359	19.6	498	8.4	214	11.9	302
10			27.9	708	29.6	752	14.1	359	20.6	524	8.9	227	12.1	308
12	29	737					14.1	359	19.6	498	9.6	243	12.6	320
12			30.5	775	32.3	819	16.3	413	22.8	578			12.6*	320

Integral Flanges in accordance with ANSI/ISA S75.03, 1985 † For threaded ends, consider 210

Table XXIII: Valve Dimensions – Classes 900, 1500, 2500

Body Size (Inch)	A						B										C				Space Needed for Disassembling			
	Distance Between Flanges*						Standard Bonnet						Extended Bonnet											
	Class 900		Class 1500		Class 2500		Class 900		Class 1500		Class 2500		Class 900		Class 1500		Class 2500		Class 1500		Class 2500		Class 1500		Class 2500	
	Inch	mm	Inch	mm	Inch	mm	Inch	mm	Inch	mm	Inch	mm	Inch	mm	Inch	mm	Inch	mm	Inch	mm	Inch	mm	Inch	mm	Inch	mm
1	11	279	11	279	12.02	305[2]	5.6	143	5.6	143	6.8	173	10.1	257	10.1	257	11.3	286	1.8	44	1.8	44	3.6	90	3.6	90
1 1/2	13	330	13	330	15.01	381[1]	8.7	220	8.7	220	8.7	221	13.2	334	13.2	334	13.2	334	2.7	68	2.4	60	5.6	141	5.6	141
2	14.8	375	14.	375	15.8	400	8.7	220	8.7	220	8.7	221	13.2	334	13.2	334	13.2	334	2.8	71	3	77	6.1	154	6.1	154
3	18.1	460	18.1	460	26.01	660[1]	11.4	289	11.4	289	12.9	328	18.4	467	18.4	467	19.9	506	4.2	106	3.7	94	8.4	214	8.3	211
4	20.9	530	20.9	530	29.01	737[1]	12.4	316	12.4	316	14.6	371	19.4	496	19.4	496	21.6	549	4.4	113	5.4	138	9.7	246	10.7	272
6	30.02	762[2]	30.02	762[2]	34.01	864[1]	16.4	493	16.4	493	17.4	442	23.4	671	23.4	671	27.3	638	7.2	183	7.3	184	12.2	309	13.6	344
8	32.8	832	32.8	832	40.3	1022	18.6	473	18.6	473	24.3	616	24.2	613	24.2	613	31.3	794	9.4	240	10.3	262	16.7	424	17.8	451
10	39	991	39	991	50	1270	21.9	556	21.9	556	26	660	28.9	734	28.9	734	33	838	11.2	284	10	264	18.3	465	19.5	495
12	44.5	1130	44.5	1130	56	1422	26.6	675	26.6	675	28	711	33.6	852	33.6	852	35	889	14	356	12.9	327	19.4	492	20.5	521
14	49.5	1257	49.5	1257			24.8	629	24.8	629			31.8	806	31.8	806							20.5	521		

*ANSI/ISA S75.15, 1987 (1) ANSI/ISA S75.16, 1987 (2) Optimux standard

OpGL
Dimensions

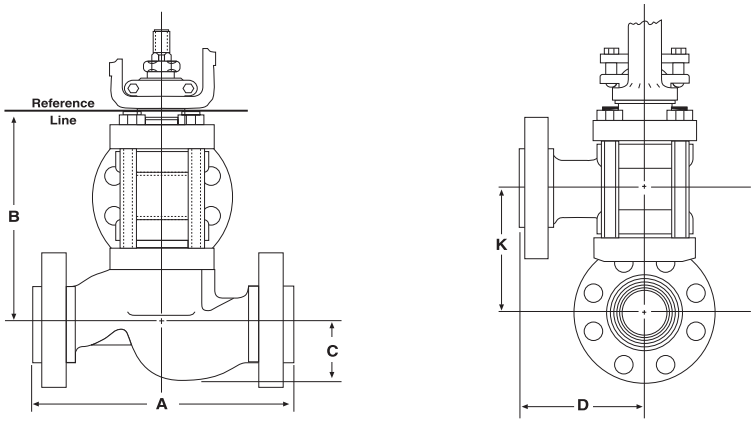

Table XXIV: Dimensions – 3-way Body

Body Size (Inch)	A						B				C		D		K		Space Needed for Disassembly	
	ANSI/ISA						Standard Bonnet		Extended Bonnet									
	Class 150		Class 300		Class 600													
	Inch	mm	Inch	mm	Inch	mm	Inch	mm	Inch	mm	Inch	mm	Inch	mm	Inch	mm	Inch	mm
1/2 & 3/4	7.3	184	7.6	194	8.1†	206†	6.7	170	11.2	284	1.5	38	4.3	180	3.4	87	3.4	86
1	7.3	184	7.8	197	8.3	210	6.7	170	11.2	284	1.8	44	4.3	180	3.4	87	3.4	86
1 1/2	8.8	222	9.3	235	9.9	251	9.1	230	13.4	341	2.3	59	4.8	121	5.4	137	5	127
2	10	254	10.5	267	11.3	286	9.3	236	13.7	347	2.3	59	5.8	146	5.6	143	5.5	140
3	11.8	298	12.5	318	13.3	337	13	329	18.5	470	3.4	86	7	178	7.6	194	7.1	181
4	13.9	353	14.5	368	15.5	394	16.7	423	22.1	562	5.2	133	8.5	216	9.9	251	9.4	240
6	17.8	451					21.6	548	26.6	675	5.5	139	8.9	226	14	356	11.6	294
			18.6	473	20	508	25.8	654	31.3	794	5.8	146	10	254	16	406	11.6	294
8	21.4	543					23.9	608	29.4	748	7	179	10.7	272	15	381	12.2	310
			22.4	568	24	610	30.2	767	35.7	907	7.5	191	12	305	18.3	464	12.2	310

In accordance with ANSI/ISA S75.03, 1985
\+ For threaded ends, consider 210

Table XXV: Weights / Classes 150 – 2500

Size (inches)	Weight in Pounds / Kilograms												Add for Extended Bonnet	
	Class 150		Class 300		Class 600		Class 900		Class 1500		Class 2500			
1/2 - 3/4	40	18	40	18	40	18							5	2
1	50	23	50	23	50	23	100	45	120	54	150	68	5	2
1 1/2	65	30	65	30	65	30	170	54	180	82	210	95	5	2
2	75	34	75	34	75	34	200	91	220	100	300	136	5	2
3	160	73	170	77	180	82	400	182	430	195	500	227	15	7
4	240	109	250	114	265	120	590	268	610	277	940	427	20	9
6	360	163	570	259	600	272	1000	454	1170	531	1400	636	40	18
8	590	268	790	359	830	377	1100	499	1320	599	1740	790	65	30
10	1050	477	1405	638	1600	726	2050	931	2200	999	2600	1180	90	41

Estimated Shipping Weights:
Note: All Shipping weights are in pounds/ kilograms and include cylinder actuators and positioners.
Special trim, accessories, actuator handwheels and others have to be added.

TRIMTECK®
OPTIMUX®

OpGL

The information and specifications described in this brochure are considered accurate, however they are intended for information purpose only and should not be considered as certified information.

Considered that Optimux products are continuously improved and upgraded, specifications, dimensions, and information described herein are subject to change without notice.

For further information or verification, consult your Optimux representative. Specific instructions for the installation, operation, troubleshooting and maintenance of the OpGL control valves are contained on the OpGL Maintenance bulletin.

Hastelloy C is a trade mark of Cabit Corporation
Monel, Inconel are trade mark of Huntington Ally
Teflon is a trade mark of E. I. DuPont Company
Stellite is a trade mark of Stoody Debro

For more information, visit our website at www.trimteck.com

nqa.
ISO 9001
Registered

Cat. Optimux OpGL Rev.07 ENG-09/2010

Printed in USA