Leading Technologies for Control

TRIMTECK®
OPTIMUX®

OpTB™ Trunnion Ball Valve

POB™ Process Optimizer Ball

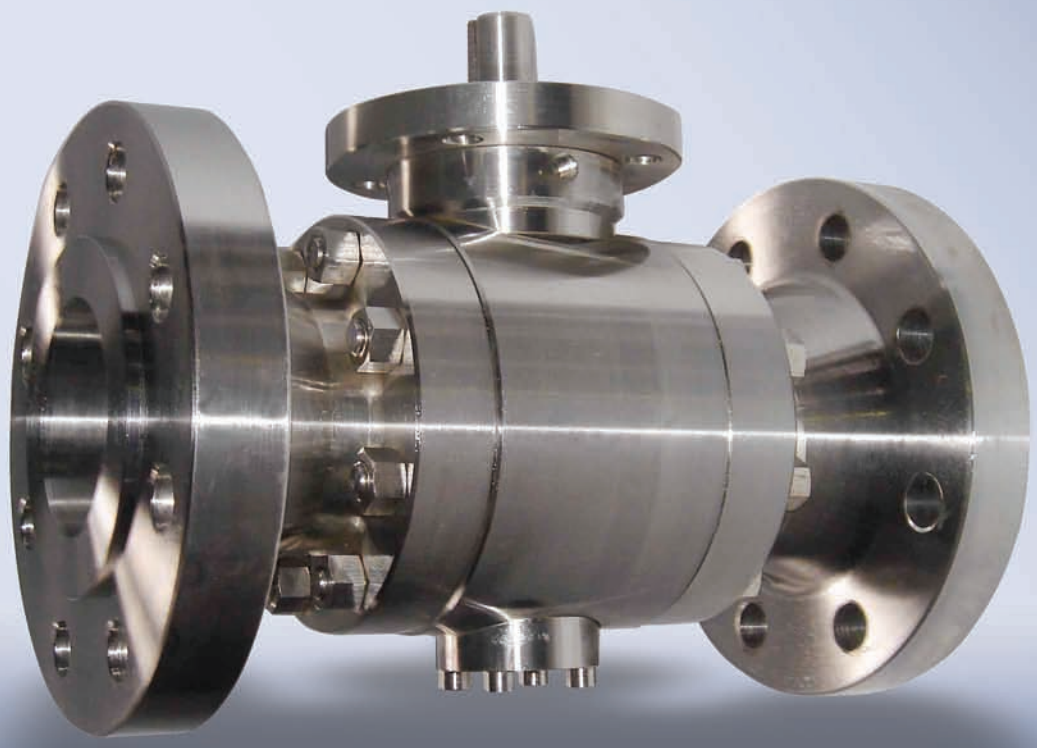

www.trimteck.com

Flow Control Products

OpTB™
Trunnion Ball Valve

INTRODUCTION

The Optimux **OpTB** Trunnion Ball Valve brings the legendary and well proven robustness and dependability of the trunnion ball design to process control applications, no longer limited to a full port option, but now being offered with our new **Process Optimizer Ball POB™** which delivers excellent flow characteristics and high flow coefficients **(Fig. 1)**.

Our new **OpTB** with its efficient **POB™** design, delivers excellent rangeability and accurate control for pressure Classes 150 to 1500 while maintaining critical features such as fire-safe and metal-to-metal tight shutoff. The **OpTB** raises the bar to new levels not yet reached by traditional V-Notch ball valve manufacturers, typically limited to 600 pressure class.

The **OpTB** has been designed with flexibility in mind, the full bore ball **(Fig. 2)** is totally compatible and interchangeable with the new **POB™ (Fig. 2)** within the same size and class valve, and with no additional valve components or special tooling required.

All these features make the **OpTB** an exceptional process control valve ideally suited for industrial services which require solutions for challenging abrasive, corrosive fluids, high temperatures and pressures.

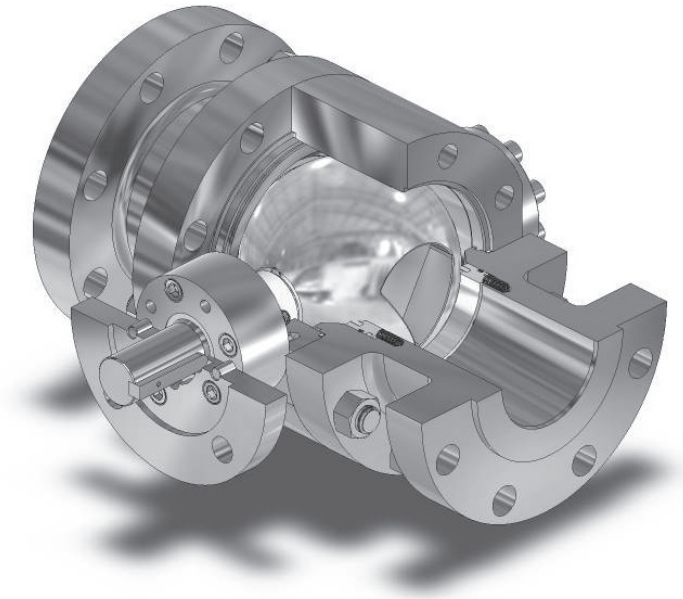

Figure 1
OpTB POB™ Process Optimizer Ball

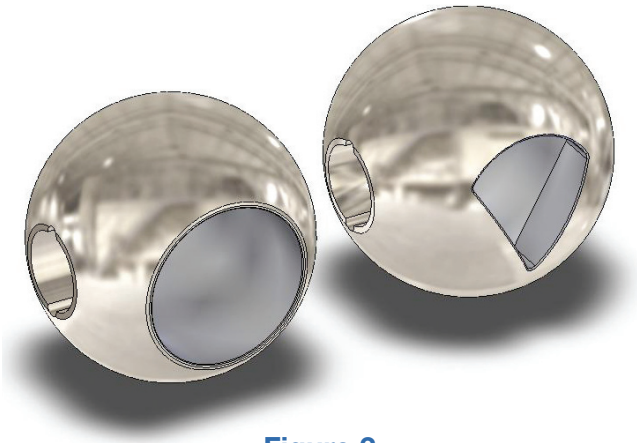

Figure 2
Full Bore & POB™ Balls

When the POB™ is used please refer to the flow coefficient Cv information shown in **Table 1** for proper selection

OpTB™
Trunnion Ball Valve

OS2T™ Optimizer Severe Service Trim

Our **OpTB** is also well equipped to withstand and manage the undesired effects of noise and cavitation in liquid fluids.

The **OS2T™** trim **(Fig. 3**), has been designed to reduce up to 25 dB of noise, as well as to eliminate the destructive effects of cavitation.

The unique design of the **OS2T™** drives the process fluid through a tortuous path consisting of a series of orifices and back channels which remove kinetic energy and lower fluid pressure,

There are several application-specific **OS2T™** trims available to handle any given fluid dynamics condition. Our application engineers will carefully evaluate your process data as to be able to choose the optimal solution.

The **OS2T™** trims have been designed to work inside the core of the **Control Optimizer Ball COP™** itself, so that the fluid characterization, as well as the noise, and cavitation abatement occurs simultaneously within the core of the ball, and not delayed upstream or downstream, where these undesired effects can damage the valve internal components.

Noise or cavitation baffles inserted upstream or downstream off valve bodies or on pipelines have been used extensively in the past, however they have proven to be less effective, especially when handling flow conditions exhibiting high noise, and cavitation.

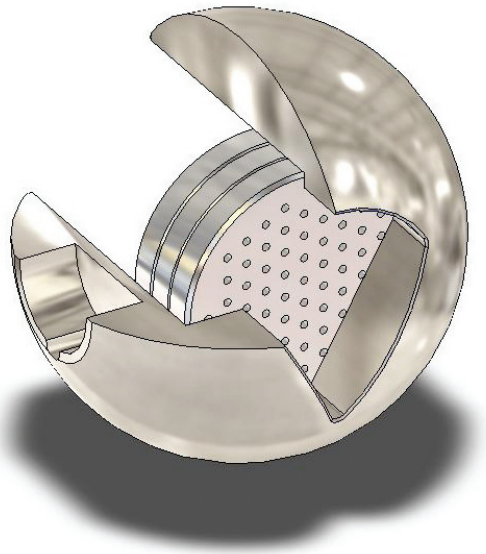

Figure 3
OpTB OS2T™
Optimizer Severe Service Trim

Typical industry applications include compressor surge control taking advantage of the high rangeability and capacity of the **OpTB™**. High pressures and temperatures associated with steam production from geo-thermal wells mixed with sand are comfortable controlled with the **POB™** specially when hardened with **CVD-5B™**. Feed gas regulation applications such as gas-to-flare are ideally suited for the **OpTB™** because of it's exceptional tight shutoff characteristics.

In general, the **OpTB™** will be one of the best choices for challenging process control applications such a multiphase fluids and light to medium slurries like those found in oil sands, mining and pulp and paper fluids.



OpTB™

Features and Advantages

- ***Rugged well proven three-piece trunnion design***
- ***Conforms to API 6D Standard***
- ***Fire-Safe tested to API 607***
- ***Lower operating torques for smooth operation while reducing actuator cost***
- ***Ball mechanical tolerances 0.0009" and 4 RMS mirror finish***
- ***Meets NACE MR01.75 Standards for sour applications***
- ***POB™ alternative offers precise flow characterization for accurate control, pressure class 150 to 1500***
- ***The POB™ design allows the control of fluids with a rangeability superior to 300:1***
- ***Our standard Full Bore Ball and the POB™ are fully interchangeable within same size and class body without any additional components***
- ***Spring loaded seat rings for positive sealing***
- ***Designed for a broad spectrum of on-off, or control application in the Oil & Gas, Chemical, Petrochemical, Geo-Thermal Power Generation, and a large variety of industrial slurries under high pressures and temperatures.***
- ***Noise abatement and anti-cavitation severe service OS2T™ trims available***

Technical Specifications		
Design Reference	**API**	**ASME**
Design Standard	API 6D	ASME B16.34
Flange Ends		ASME B 16.47 ASME B 16.5
Buttweld Ends		ASME B 16.25
Test & Inspection	API 6D API 598	
Fire-safe	API 607	

OpTB™
Trunnion Ball Valve

POB™ Flow Coefficients Cvs										
Cv versus Percent Opening										
Size Inch	100	90	80	70	60	50	40	30	20	10
2	112	89	62	44	29	19	12	9	2	0.17
3	285	244	182	130	85	57	32.5	15.1	4.5	0.4
4	470	394	294	200	127	76	40	17.2	7.5	1.4
5	525	418	384	316	283	159	86	54.8	19.3	2.3
6	894	809	641	467	324	209	130	70.3	27.8	4.3
8	1,479	1,281	993	721	498	335	196.8	101.5	40.2	5.5
10	3,524	2,786	2,300	1,764	1,261	870	615.6	345.6	204.7	87.5
12	4,482	3,413	2,835	2,257	1,609	1,090	697.6	432.5	257.6	113.4
14	5,123	4,753	4,288	2,985	2,125	1,324	983.3	572.2	389.5	154.3
16	7,597	5,914	5,050	3,885	2,786	1,880	1,231	763.3	475.2	199.6
18	9,116	7,392	6,565	4,856	3,621	2,256	1,538	954.5	594.8	259.5
20	10,939	8,870	8,206	6,312	4,526	2,933	1,845	1,240	773.2	324.3
24	14,220	10,644	10,011	7,748	5,748	3,813	2,195	1,587	966.5	395.64

Table 1

OpTB™ Full Port Flow Coefficients Cvs			
Cvs Shown at 90° Opening			
Size Inch	CL150	CL300	CL600
2	500	430	370
3	1,360	1,100	1,020
4	2,500	2,000	1,850
6	5,300	5,250	4,400
8	10,750	10,100	8,450
10	17,500	16,820	14,250
12	26,750	25,950	22,550
14	31,850	30,900	28,500
16	44,000	42,600	38,150
18	58,000	55,870	51,150
20	75,500	72,500	68,500
22	91,770	86,850	80,150
24	113,400	109,340	98,860

Table 2

Cvs information for CL900 and CL1500 available on request.
CVs Values for reduced bore available on request.



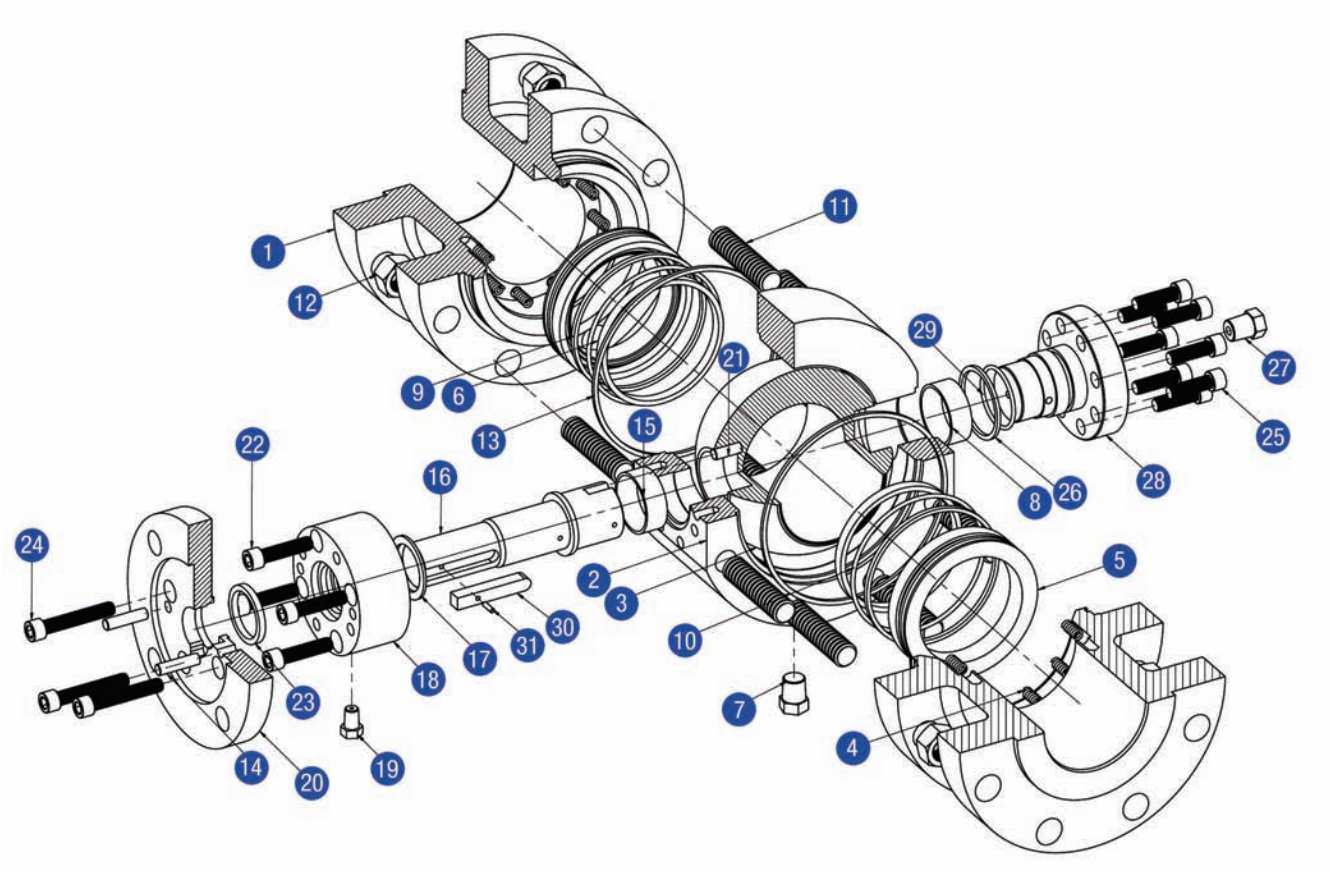

Figure 4: Exploded View of Body Sub-Assembly

OpTB™
Trunnion Ball Valve

Materials List			
Item	**Description**	**Carbon Steel/NACE**	**Stainless Steel**
1	Flange	ASTM A105	ASTM A182-F316
2	Body	ASTM A105	ASTM A182-F316
3	Ball	ASTM A105/ENP-CVD-5B	ASTM A182-F316/ CVD-5B
4	Seat Spring	Inconel X-750	Inconel X-750
5	Seat Ring	ASTM A105/ENP-CVD-5B	ASTM A182-F316/CVD-5B
6	Seat Insert	25% Glass Filled PTFE	25% Glass Filled PTFE
7	Plug Drain	316 SS	316 SS
8	Bearing	316SS/PTFE/MoS2	316SS/PTFE/MoS2
9	Firesafe Seal Gasket	316SS/Graphite	316SS/Graphite
10	O-ring	NBR	NBR
11	Body Stud	ASTM A193-B7	ASTM A193-B8
12	Body Nut	ASTM A194-2H	ASTM A194-8
13	Seal Gasket	316SS/Graphite	316SS/Graphite
14	Gland Pin	Carbon Steel	316 SS
15	Bearing	316SS/PTFE/MoS2	316SS/PTFE/MoS2
16	Stem	ASTM A105/ENP	ASTM A182-F316
17	Stem Gasket	316SS/Graphite	316SS/Graphite
18	Packing Box	ASTM A105	ASTM A182-F316
19	Stem Injection	Assembly	Assembly
20	Top Flange	ASTM A105	ASTM A182-F316
21	Pin	316 SS	316 SS
22	Packing Box Screw	Carbon Steel	316 SS
23	Packing	316SS/Graphite	316SS/Graphite
24	Flange Screw	Carbon Steel	316 SS
25	Trunnion Plate Screw	Carbon Steel	316 SS
26	Trunnion Gasket	316SS/Graphite	316SS/Graphite
27	Bleed Valve	Assembly	Assembly
28	Trunnion Plate	ASTM A216-WCB/ENP	ASTM A351-CF8M
29	O-Ring	NBR	NBR
30	Key	Carbon Steel	316 SS
31	Key Pin	Carbon Steel	316 SS

Table 3

Notes: 1. All NACE materials comply with MR01.75.99
2. Alternative materials are also available for all of the components listed

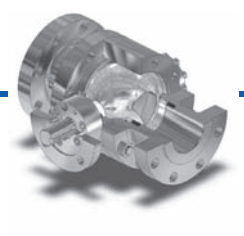

OpTB Design Operating Torque					
Stem Torque Ft. Lbs					
Size Inch	CL150	CL300	CL600	CL900	CL1500
2	36	64	108	152	241
3	44	81	140	199	318
4	111	197	338	479	761
6	232	398	669	940	1,483
8	751	1,183	1,886	2,589	3,999
10	798	1,349	2,244	3,139	4,936
12	1,149	1,918	3,169	4,419	6,929
14	1,786	3,128	5,312	7,495	11,876
16	2,224	3,944	6,741	9,538	15,152
18	3,370	5,878	9,955	14,032	22,215
20	4,433	7,795	13,264	18,732	29,706
22	5,113	8,953	15,199	21,444	33,978
24	7,163	12,713	21,741	30,769	48,886
26	8,812	15,000	25,064	35,128	
28	10,702	18,487	31,145	43,810	
30	13,264	23,324	39,685	56,047	
32	15,742	27,681	47,099	66,516	
34	18,702	31,719	52,891	74,062	
36	24,465	41,545	69,325	97,105	
40	31,646	53,795	89,818		
42	37,431	63,730	106,503		
48	49,362	84,028	140,409		

Table 4

Notes: 1. Torques shown on this table are used as a guide for actuator selection. A safety factor of 1.3 - 1.5 times is recommended for actuator sizing.
2. Torques may change according to different mediums and trim materials

OpTB™
Trunnion Ball Valve

Manual Actuators

For on/off applications, and in addition to a broad selection of automatic actuators, the OpTB can be fitted with hand levers or worm gear actuators with hand wheel.

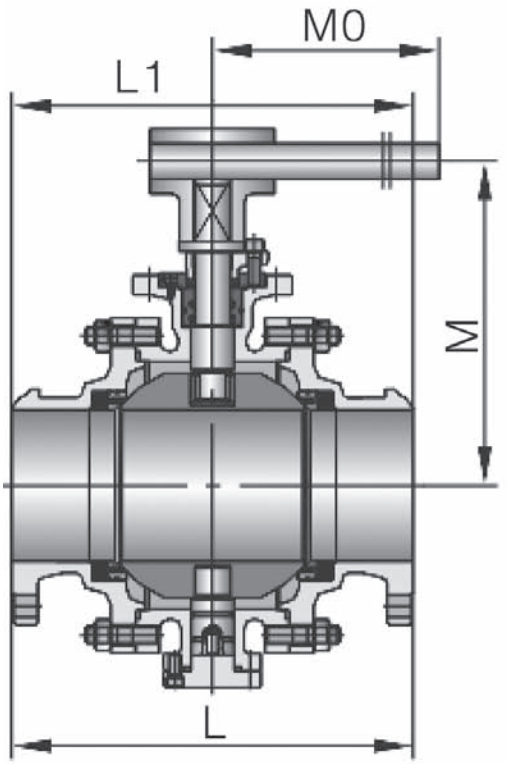

Figure 5
Hand Operated

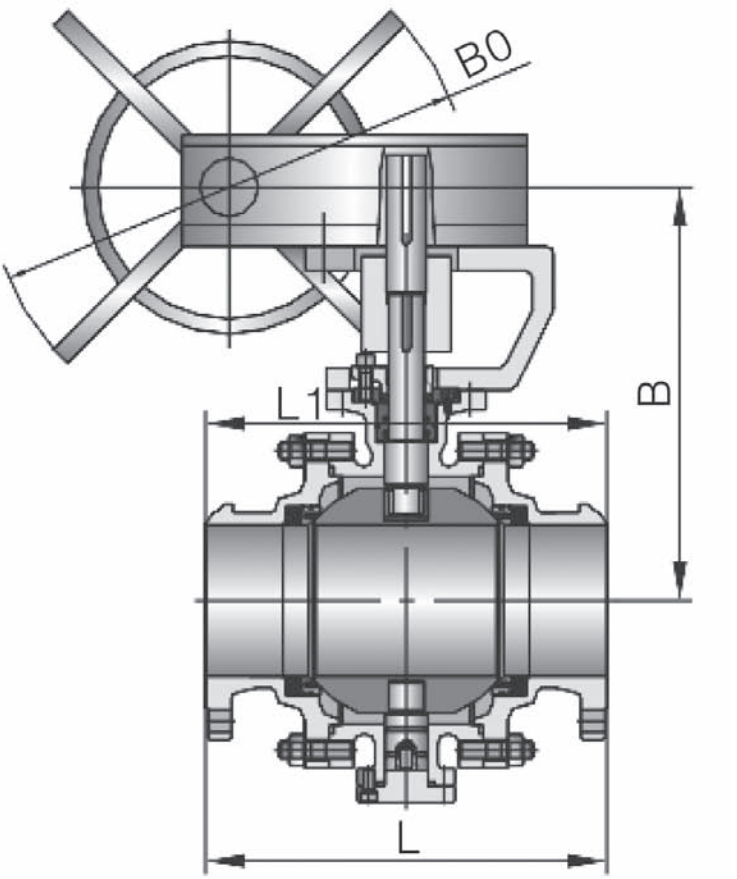

Figure 6
Worm Gear Actuator



Cast & Forged Steel Trunnion Ball Valve
Valve Weight & Dimensions – Class 150

	Flange	Butt Weld	Hand operated		Worm Gear Act.		Weight Lbs
Size Inch	L	Li	M	Mo	B	Bo	Flanged
2	7.0	8.5	4.7	9.0	-	-	66
3	8.0	11.0	6.0	15.7	-	-	132
4	9.0	12.0	7.0	25.6	-	-	202
5	14.0	15.0	11.8	41.3	-	-	325
6	15.5	18.0	13.0	41.3	-	-	418
8	18.0	20.5	-	-	15.7	23.6	759
10	21.0	22.0	-	-	19.5	23.6	1,089
12	24.0	25.0	-	-	22.8	31.5	1,551
14	27.0	30.0	-	-	26.6	31.5	1,889
16	30.0	33.0	-	-	26.4	31.5	2,244
18	34.0	36.0	-	-	27.5	31.5	3,168
20	36.0	39.0	-	-	33.0	31.5	4,219
24	42.0	45.0	-	-	41.3	31.5	6,166
28	49.0	53.0	-	-	43.3	31.5	8,899
32	54.0	60.0	-	-	45.3	31.5	12,078
36	60.0	68.0	-	-	48.4	31.5	16,753
40	67.8	76.0	-	-	52.0	31.5	22,596

Table 5

OpTB™
Trunnion Ball Valve

Cast & Forged Steel Trunnion Ball Valve
Valve Weight & Dimensions – Class 300

	Flange	Butt Weld	Hand Operated		Worm Gear Act.		Weight Lbs
Size Inch	L	Li	M	Mo	B	Bo	Flanged
2	8.5	8.5	4.2	9.0	-	-	68
3	11.1	11.0	6.0	15.7	-	-	152
4	12.0	12.0	7.0	25.6	-	-	244
5	15.0	15.0	12.0	41.3	-	-	386
6	15.8	15.9	13.0	41.3	-	-	464
8	19.8	20.5	-	-	15.7	23.6	827
10	22.4	22.0	-	-	19.5	23.6	1,188
12	25.5	25.0	-	-	22.8	31.5	1,678
14	33.0.	30.0	-	-	24.6	31.5	1,980
16	33.0	33.0	-	-	26.4	31.5	2,860
18	36.0	36.0	-	-	27.5	31.5	3,773
20	39.0	39.0	-	-	33.0	31.5	4,598
24	45.0	45.0	-	-	41.3	31.5	6,358
28	53.0	60.0	-	-	43.3	31.5	10,065
32	60.0	60.0	-	-	45.3	31.5	13,728
36	68.0	68.0	-	-	48.4	31.5	18,557
40	82.0	82.0	-	-	52.0	31.5	24,640

Table 6



Cast & Forged Steel Trunnion Ball Valve
Valve Weight & Dimensions – Class 600

	Flange	Butt Weld	Hand Operated		Worm Gear Act.		Weight Lbs
Size Inch	L	Li	M	Mo	B	Bo	Flanged
2	11.5	11.5	4.3	25.6	-	-	99
3	14.0	14.0	7.8	25.6	-	-	176
4	17.0	17.0	-	-	9.2	23.6	330
6	22.0	22.0	-	-	11.8	31.5	545
8	26.0	26.0	-	-	14.8	31.5	963
10	31.0	31.0	-	-	17.5	31.5	1,375
12	33.0	33.0	-	-	20.3	31.5	1,542
14	35.0	35.0	-	-	21.6	31.5	2,706
16	39.0	39.0	-	-	24.2	31.5	3,377
18	43.0	43.0	-	-	29.5	31.5	4,697
20	47.0	47.0	-	-	31.9	31.5	5,808
24	55.0	55.0	-	-	41.3	31.5	8,712
28	61.0	61.0	-	-	46.4	31.5	13,332
32	70.0	70.0	-	-	49.2	31.5	17,215
36	82.0	82.0	-	-	51.7	31.5	23,430
40	92.0	92.0	-	-	56.0	31.5	32,340

Table 7

OpTB™
Trunnion Ball Valve

Cast & Forged Steel Trunnion Ball Valve
Valve Weight & Dimensions – Class 900

	Flange	Butt Weld	Hand Operated		Worm Gear Act.		Weight Lbs
Size Inch	L	Li	M	Mo	B	Bo	Flanged
2	14.5	14.5	8.6	25.6	-	-	114
3	15.0	15.0	10.2	25.6	-	-	191
4	18.0	18.0	-	-	11.8	23.6	352
6	24.0	24.0	-	-	14.4	31.5	847
8	29.0	29.0	-	-	15.5	31.5	1,120
10	33.0	33.0	-	-	19.9	31.5	1,804
12	38.0	38.0	-	-	22.6	31.5	2,475
14	40.5	40.5	-	-	26.5	31.5	3,542
16	44.5	44.5	-	-	30.1	31.5	4,422
18	48.0	48.0	-	-	34.3	31.5	6,182
20	52.0	52.0	-	-	35.2	31.5	7,612
24	61.0	61.0	-	-	37.8	31.5	12,093
28	70.0	67.0	-	-	47.6	31.5	22,444
32	80.7	70.0	-	-	50.8	39.4	26,622

Table 8



Cast & Forged Steel Trunnion Ball Valve
Valve Weight & Dimensions – Class 1500

	Flange	Butt Weld	Hand Operated		Worm Gear Act.		Weight Lbs
Size Inch	L	Li	M	Mo	B	Bo	Flanged
2	14.5	14.5	8.7	25.6	8.7	23.6	132
3	18.5	18.5	10.3	25.6	10.3	23.6	253
4	21.5	21.5	-	-	11.8	23.6	427
6	27.7	27.7	-	-	14.4	31.5	1,276
8	32.7	32.7	-	-	18.7	31.5	1,654
10	39.0	39.0	-	-	22.8	31.5	2,626
12	44.5	44.5	-	-	27.5	31.5	4,774
14	49.5	49.5	-	-	30.0	31.5	4,950
16	54.5	55.3	-	-	32.8	31.5	6,072

Table 9

OpTB™
Rotary Actuators, Features and Characteristics

Optimux can fit its OpTB with the best performing actuators such as scotch yoke, electric, and electro-hydraulic according to the process application requirements and customer preference.

RPA Rack and Pinion Actuators

Optimux's Series RPA actuators are compact, allow for field reversibility, provide adequate torque for most standard applications and are easy to maintain. RPA actuators are designed for extremely long cycle life when utilized in normal loading applications. The RPA actuators will take service temperatures of -10° to 275° F (-23° to 135° C).

Double Acting Torque Values (in. Lbs)					
PSI	**40**	**60**	**80**	**100**	**120**
RPA052	263	395	526	658	789
RPA148	740	1,109	1,479	1,849	2,219
RPA222	1,109	1,664	2,218	2,773	3,327
RPA470	2,071	3,106	4,142	5,177	6,213
RPA900	4,550	6,825	9,100	11,375	13,650

Table 10

* Other model numbers and torque options are also available

Optimux HPP3000 Smart Valve Positioners

The HPP3000 is a high performance microprocessor-based, current-to-pneumatic HART® positioner which also has available options such as Foundation™ Fieldbus, DE, and standard 4-20mA.

This smart positioner incorporates state-of-the-art features such as: Automatic configuration, split range options, 16 points of characterization, self-diagnostics, etc, all contributing to increase productivity and efficiency in industrial plants.

The HPP3000 is FM/CENELEC/NEPSI/CSA certified for explosion proof and intrinsically safe requirements. For more information please refer to Optimux HPP3000 technical bulletin: TB-HPP3000-07-04.

Optimux HPP3500 Smart Valve Positioners

The HPP3500 delivers all the same technical benefits and characteristics as of our HPP3000, however the HPP3500 was specially designed to conform the needs of most rotary actuated valves, such as smaller footprint requirements and specific mounting options such a NAMUR. The HPP3500 is intrinsically safe and is certified by FM/CENELEC/ATEX. For more information please refer to Optimux HPP3500 technical bulletin: TB-HPP3500-07-04.

The HPP3000 and HPP3500 in combination with our rotary actuators: deliver the highest level of control accuracy and responsiveness of the industry.



Figure 7: RPA Rack and Pinion Actuator



Figure 8: HPP3000 Digital Series



Figure 9: HPP3500 Digital Series

TRIMTECK®
OPTIMUX®

OpTB™
Trunnion Ball Valve

The information and specifications described in this brochure are considered accurate, however they are intended for information purpose only and should not be considered as certified information.

Considering that Optimux products are continuously improved and upgraded, specifications, dimensions, and information described herein are subject to change without notice.

For further information or verification, consult your Optimux representative. Specific instructions for the installation, operation, troubleshooting and maintenance of the OpTB control valves are contained on the OpTB Maintenance Bulletin.

Inconel are trade mark of Huntington Ally
Teflon is a trade mark of E. I. DuPont Company
CVD/5B is a trademark of Trimteck

For more information, visit our website at www.trimteck.com

Cat. Optimux OpTB Rev.02 ENG-09/2010

Printed in the U.S.A.